Hustler® Parts Manual

HUSTLER®
TURF EQUIPMENT

200 South Ridge Road

Hesston, Kansas

67062

WARNING

The engine exhaust from this product contains chemicals known to the state of California to cause cancer, birth defects or other reproductive harm.

NOTICE OF REQUIREMENT OF SPARK ARRESTER MUFFLER

This equipment may create sparks that can start fires around dry vegetation. California Public Resources Code Section 4442.6 provides that it is unlawful to use or operate an internal combustion engine on any forest-covered, brush-covered, or grass-covered land unless the engine is equipped with a spark arrester maintained in effective working order. A spark arrester is a device constructed of nonflammable materials specifically for the purpose of removing and retaining carbon and other flammable particles over 0.0232 of an inch in size from the exhaust flow of an internal combustion engine that uses hydrocarbon fuels or which is qualified and rated by the United States Forest Service. Other states or federal areas may have similar laws. The Operator Should Contact Local Fire Agencies For Laws or Regulations Relating to Fire Prevention Requirements. THIS EQUIPMENT DOES NOT HAVE A SPARK ARRESTER AND YOU SHOULD CONTACT YOUR AUTHORIZED DEALER FOR THE PURCHASE OF A SPARK ARRESTER.

Inspect spark arrester daily; replace every 500 hours or as needed.

The Engine Owner's Manual provides information regarding the U.S. Environmental Protection Agency (EPA) and the California Emission Control Regulation of emission systems, maintenance and warranty.

Keep Engine Owner's Manual with your unit. Should the Engine Owner's Manual become damaged or illegible, replace immediately. Replacements may be ordered per the information found in the Product Information section of the owner's manual.

Federal law and California State law prohibit the following acts or the causing thereof:

1. The removal or rendering inoperative by any person other than for purposes of maintenance, repair, replacement, of any device or element of design incorporated into any equipment for the purposes of emissions control prior to or after its sales or delivery to the ultimate purchaser or while it is in use, or
2. The use of the equipment after such device or element of design has been removed or rendered inoperative by any person.

General Information 1

Frame, Fenders & Instrument Panel

Frame 3-1
Instrument Panel, Fenders, Footrest & Wire Harness 3-2
Battery 3-3

Transmissions, Steering & Brake

Transmissions & Drive Belt 4-1
Transmission Service Parts 4-2
Steering & Brake 4-3

Wheels & Tires

Wheels & Tires 5-1
Front Wheel Assembly 5-2
Drive Wheel Assembly 5-3

Engine, Muffler, Clutch & Fuel System

Engine, Muffler, Clutch & Fuel System (Multi-Page) 6-1
Engine Service Parts - FR541V 6-2
Fuel System (Multi-Page) 6-3

Deck, Deck Pulleys, Spindles, Deck Belt, Blades & Deck Lift

Service Deck 7-1
Deck Pulleys & Spindles 7-2
Spindle Service Parts - 604214 7-3
Deck Belt, Discharge Chute, Pulley Covers & Blades 7-4
Deck Lift & Mounting Hardware (Multi-Page) 7-5

Seat

Seat 8-1

General Information

Note: *When ordering parts, you must use the part number as shown for each part, not the index number. Always give the model and serial number to your parts and service representative.*

Note: *Items sold in bulk such as seals and hoses are sold by the foot.*

Using This Manual

This manual is part of a service package for the Hustler® mowers. Use of this manual in conjunction with other Hustler® mower and component manuals will provide the information necessary to service and maintain Hustler® mowers.

This Parts Manual provides a complete parts listing for the unit. Use this manual when ordering parts. Illustrations used were current at the time of printing, but subsequent production changes may cause your machine to vary slightly in detail. Excel Industries, Inc. reserves the right to redesign and change the machine as deemed necessary, without notification. If a change has been made to your machine which is not reflected in this parts manual, see your authorized dealer for current information and parts.

The Service Manual is a service guide for use by Service Technicians. It provides the necessary information needed to perform normal maintenance requirements on these units.

The Operator's Manual provides fundamental operational information and operational safety that is needed when operating the mower.

The component manuals are furnished by the various manufacturers to be used for the troubleshooting and servicing of their products.

Hardware Description Codes & Abbreviations

The following codes are used throughout this parts manual. Refer to this list when ordering parts.

ABBREVIATION	DESCRIPTION	ABBREVIATION	DESCRIPTION
CB	CARRIAGE BOLT	MB	MACHINE BUSHING
CE	CLEVIS PIN	MS	MACHINE SCREW
CN	CLIP NUT	NT	NUT
CP	COTTER PIN	SC	SELF TAPPING CAP SCREW
CS	CAP SCREW	SH	SOCKET HEAD
CW	CUP WASHER	SB	SHOULDER BOLT
FDRW	FENDER WASHER	SS	SET SCREW
FW	FLAT WASHER	OD	OUTSIDE DIAMETER
HX	HEX HEAD	ID	INSIDE DIAMETER
LW	LOCK WASHER	WN	WELD NUT

Standard Torques

The following chart lists the standard torque values for the threaded fasteners found in this manual. Torque all cap screws, nuts and set screws to these values unless a different torque is shown in the Notes section next to the fastener.

SIZE	FT-LBS	N•M	SIZE	FT-LBS	N•M
.250	8.2	11.1	M3	1	1.3
.312	17	23	M4	2.2	3
.375	30	40	M5	4.5	6.1
.438	48	65	M6	7.7	10.4
.500	73	99	M8	18.5	25
.562	105	143	M10	37	50
.625	145	200	M12	64	87
.750	260	350	M14	80	108.5
.875	420	565	M16	160	215
1.00	625	850	M20	320	435
			M24	555	750

Pagina lasciata volutamente in bianco

Frame

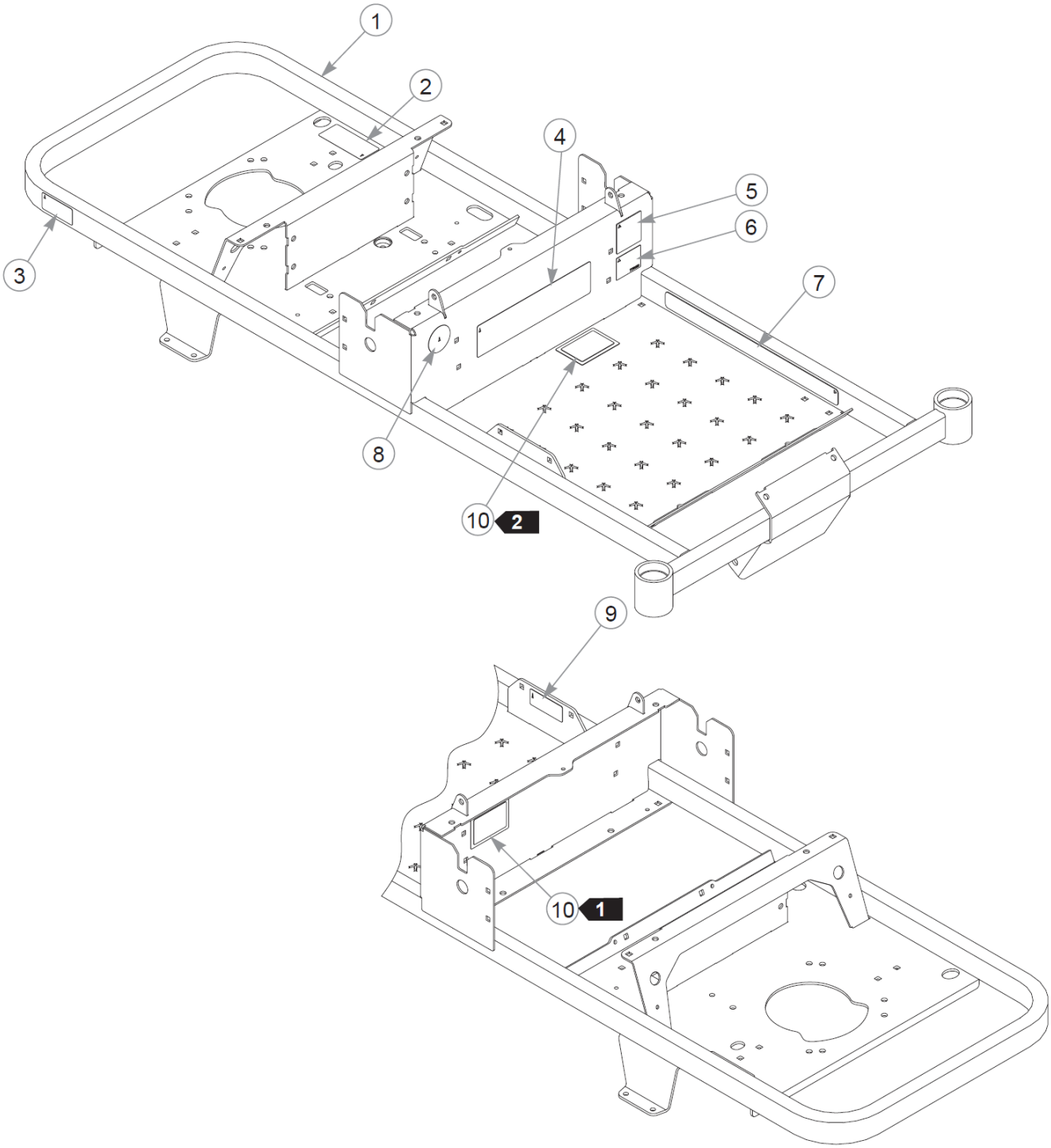

Frame

Elemento	Parte n.	Q.ta	Nome
1	555897	1	SVC, FRAME CE
2	601967	1	DECAL, ENGINE COMPART
3	602041	1	DECAL, HOT
4	608090	1	DECAL, DASH XD
5	794834CE	1	CE 100 DBA LIMIT DECAL
6	776310	1	DECAL, CE MARK
7	601981	1	DECAL, SAFE OPERATE-GRAY
8	608127	1	DECAL, USA, F&D
9	608354	1	DECAL, DECK HEIGHT CE
10	N/A	2	SERIAL NUMBER / SPEC DECAL

Comments for Page: Frame

1. Serial number decal. In the event the serial number decal becomes damaged or illegible, please contact your dealer to order a replacement.
2. EPA compliance decal.
3. The frame includes the decals.

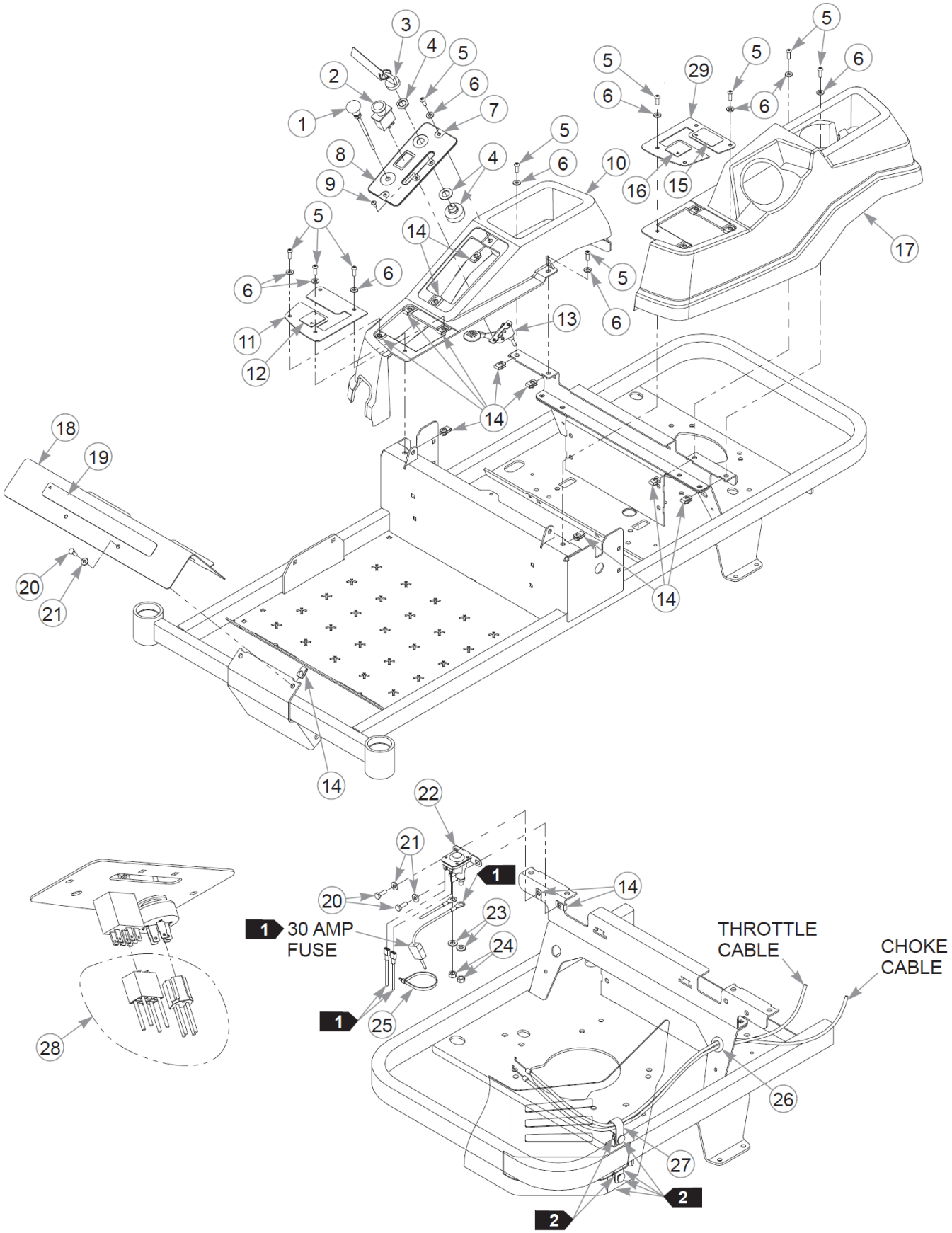
1
2
3
4
5
6
7
8
9
10
11
12
13
14
15
16
17
18
19
20
21
22
23
24
25
26
27
28
29
1 30 AMP FUSE
THROTTLE CABLE
CHOKE CABLE
2

Instrument Panel, Fenders, Footrest & Wire Harness

Elemento	Parte n.	Q.ta	Nome
1	608276	1	CABLE ASM - CHOKE
2	776476	1	SWITCH, PTO 6201-321
3	785808	1	KEY ASSEMBLY
4	045898	1	IGNITION SWITCH
5	605473	14	CS .250-20X0.75 BH TX BZ
6	605628	14	FW 0.281X.63X.07 ZB
7	554826	1	SVC, INST PANEL
8	607065	1	DECAL, INSTRUMENT PANEL
9	606851	2	CS 10-24X .500 PH SH ZN
10	607063	1	FENDER RH
11	554827	1	SVC, STEERING PLATE R
12	785220	1	DECAL, STEERING R.S.
13	608275	1	CABLE ASM - THROTTLE
14	601982	18	CN .250-20X .150 MAX THK
15	605782	1	DECAL, LEVEL FUEL BLOWM
16	785139	1	DECAL, STEERING L.S.
17	608195	1	FENDER, LH
18	554829	1	SVC, FOOTREST
19	602407	1	DECAL, HUSTLER ID
20	055939	4	CS .250-20X0.75 HX G5 ZN
21	768515	4	FW 0.281SAE
22	606445	1	STARTER SOLENOID
23	768523	2	FW 0.343SAE
24	041152	2	NT 0.312-24 HX G8
25	000331	1	WIRE TIE, SMALL/SHORT
26	601400	1	GM .63 x1.13 x.88 x .13
27	043570	1	CLIP - HOSE - SINGLE(FS)
28	608239	1	WIRE HARNESS
29	555895	1	SVC, STEERING PLATE L

Comments for Page: Instrument Panel, Fenders, Footrest & Wire Harness

1. Part of the wire harness.
2. Part of the Engine Guard Assembly.
3. The instrument panel, footrest and steering plates include the decals.

Battery

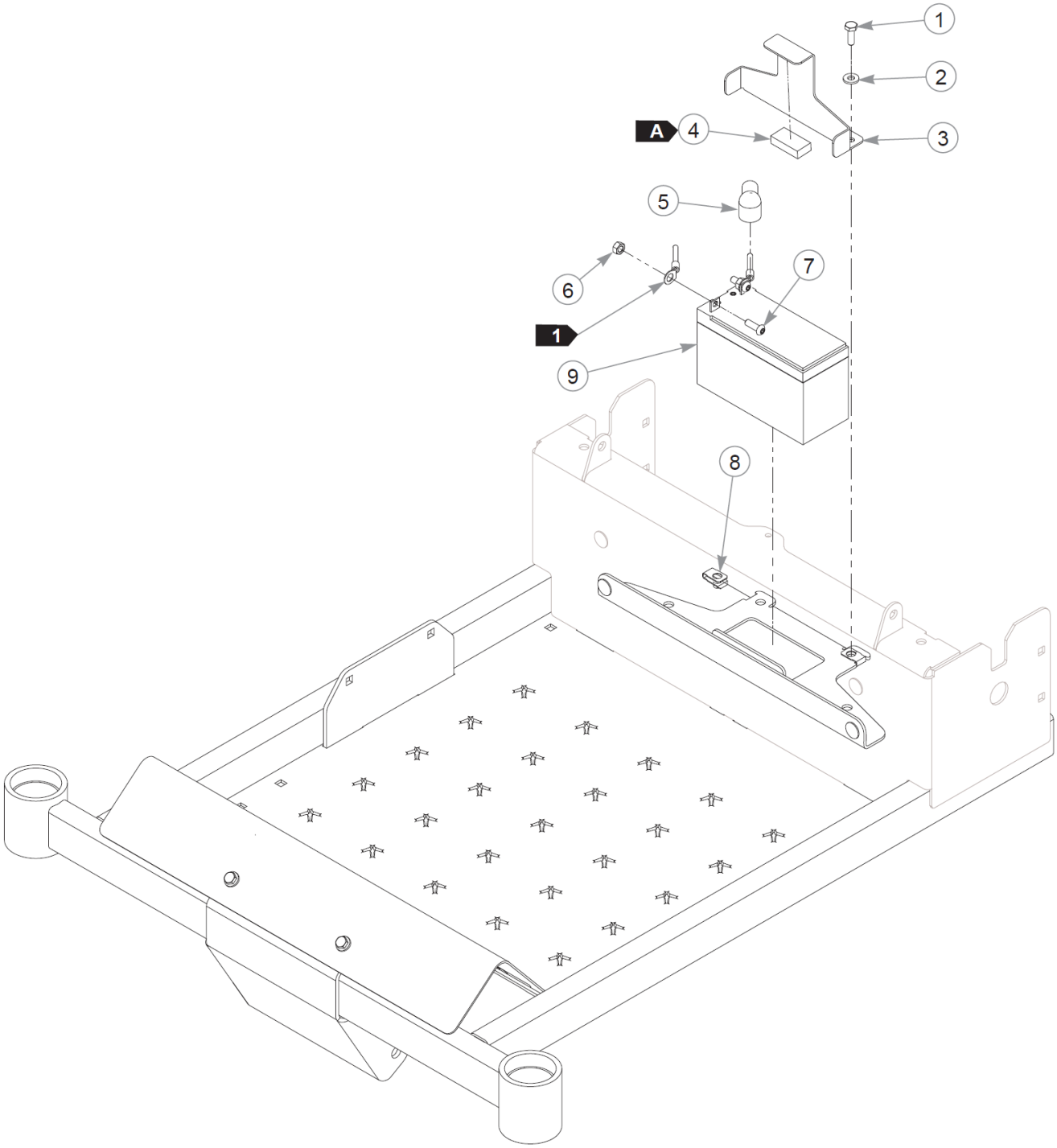

Battery

Elemento	Parte n.	Q.ta	Nome
1	055939	2	CS .250-20X0.75 HX G5 ZN
2	768515	2	FW 0.281SAE
3	608018-3	1	BATTERY HOLD DOWN
4	713198	1.5"	SEAL 3/8x3/4 SOLD BY FT
5	601319	1	POS. BATTERY CABLE BOOT
6	024927	2	NT .250-20HXG5
7	605473	2	CS .250-20X0.75 BH TX BZ
8	601982	2	CN .250-20X .150 MAX THK
9	607723	1	BATTERY, AGM 12V 9AMH

Comments for Page: Battery

1. When performing service on the mower, disconnect the negative battery cable (black) and do not reconnect it to the battery until ready to start the engine.

Transmissions & Drive Belt

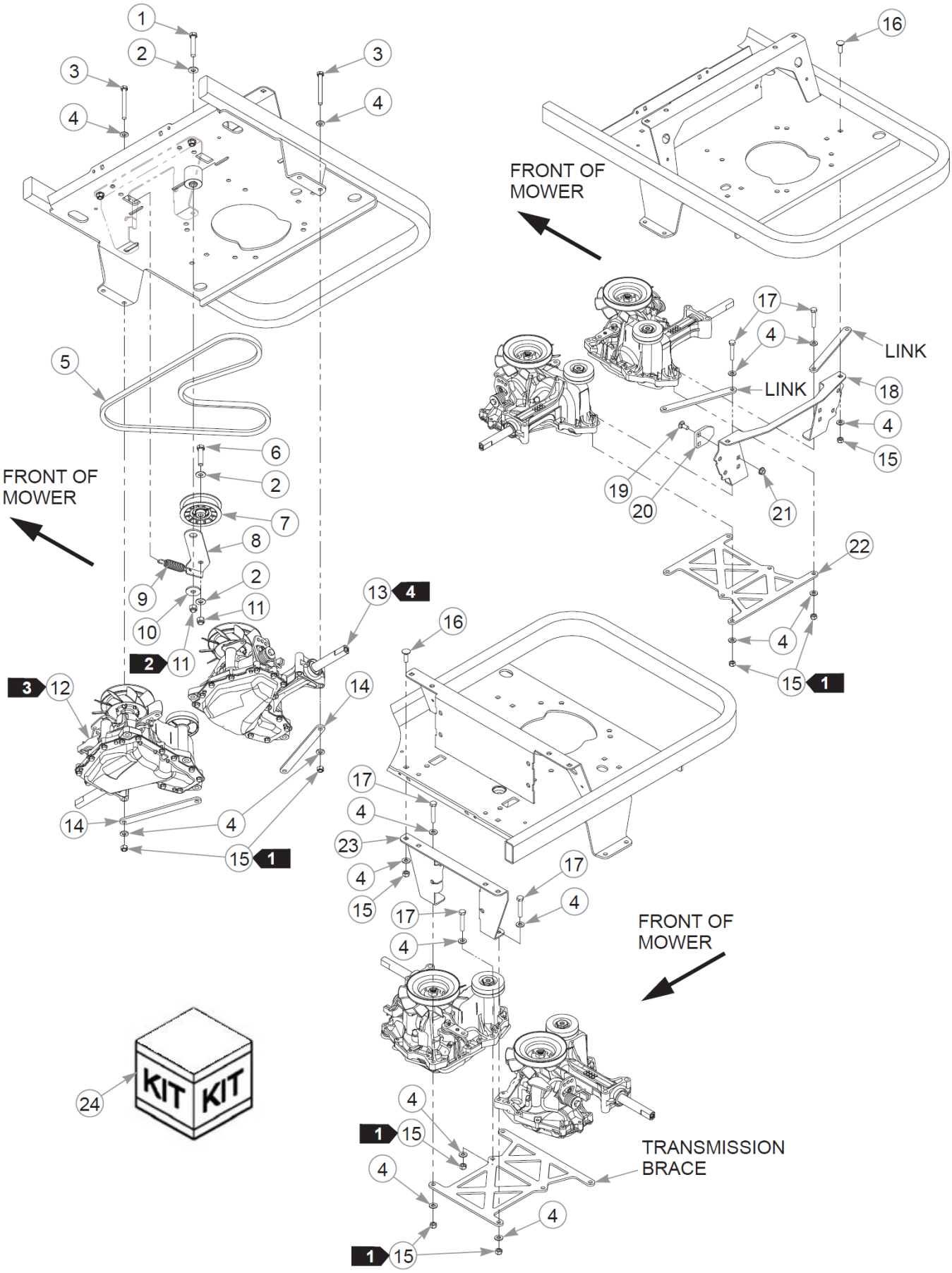

Transmissions & Drive Belt

Elemento	Parte n.	Q.ta	Nome
1	016410	1	CS .375-16X2.000HXG5
2	767954	3	FW 0.379X.82X.06 HD ZN
3	043067	4	CS .312-18X3.000HXG5
4	768523	24	FW 0.343SAE
5	606997	1	DRIVE BELT
6	705160	1	CS .375-16X1.625HXG5
7	607163	1	PULLEY, 3" FLAT POLY
8	124545-4	1	TENSIONER ARM
9	607201	1	SPRING, EXTENSION
10	712893	1	FW 0.406X1.25X.12 HD ZN
11	086660	2	NT .375-16NLG8
12	606994	1	TRANSMISSION, ZT1800
13	606995	1	TRANSMISSION, ZT1800
14	125017-1	2	LINK
15	058776	14	NT .312-18NLG5
16	037887	4	CB .312-18X 1.000 FUL ZN
17	050161	6	CS .312-18X1.750HXG5
18	126968-1	1	TRANSMISSION BRACE
19	016253	2	CB .312-18X .750 FUL ZN
20	127080-1	1	ANCHOR - CLUTCH
21	016832	2	NT .312-18FLKG5
22	126969-1	1	TRANSMISSION BRACE
23	126967-1	1	TRANSMISSION BRACE
24	608515	1	KIT - SEAL, ZT1800

Comments for Page: Transmissions & Drive Belt

1. Torque to 23 N•m.
2. Tighten the nut, but make sure the tensioner arm still pivots freely.
3. Right side transmission.
4. Left side transmission.

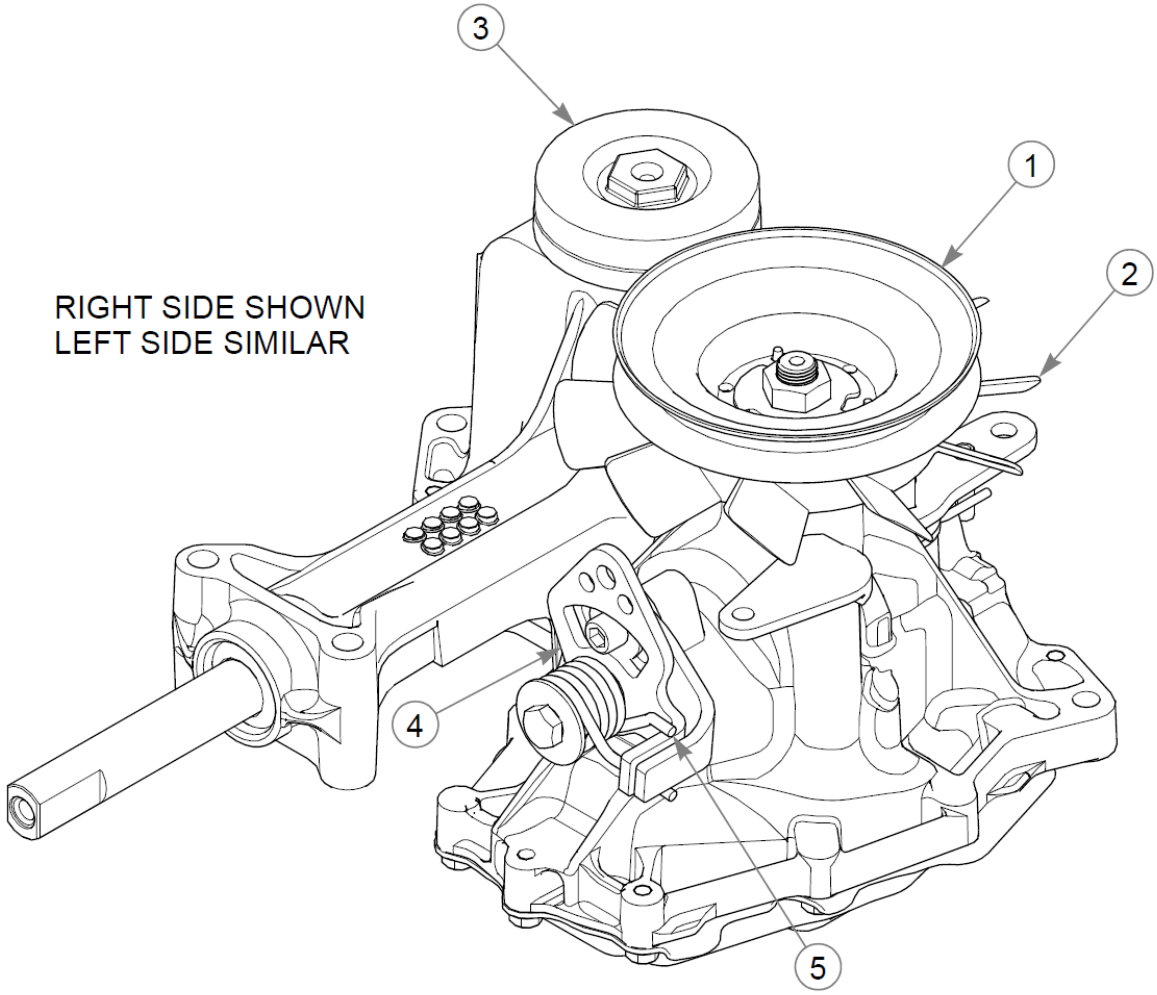
3
1
2
RIGHT SIDE SHOWN
LEFT SIDE SIMILAR
4
5

Transmission Service Parts

Elemento	Parte n.	Q.ta	Nome
1	607128	1	KIT, FAN PULLEY
2	607727	1	FAN - 7.0" (10 BLADE)
3	607131	1	BREATHER ASSY
4	607129	1	KIT, RTN
5	607130	1	RTN SPRING

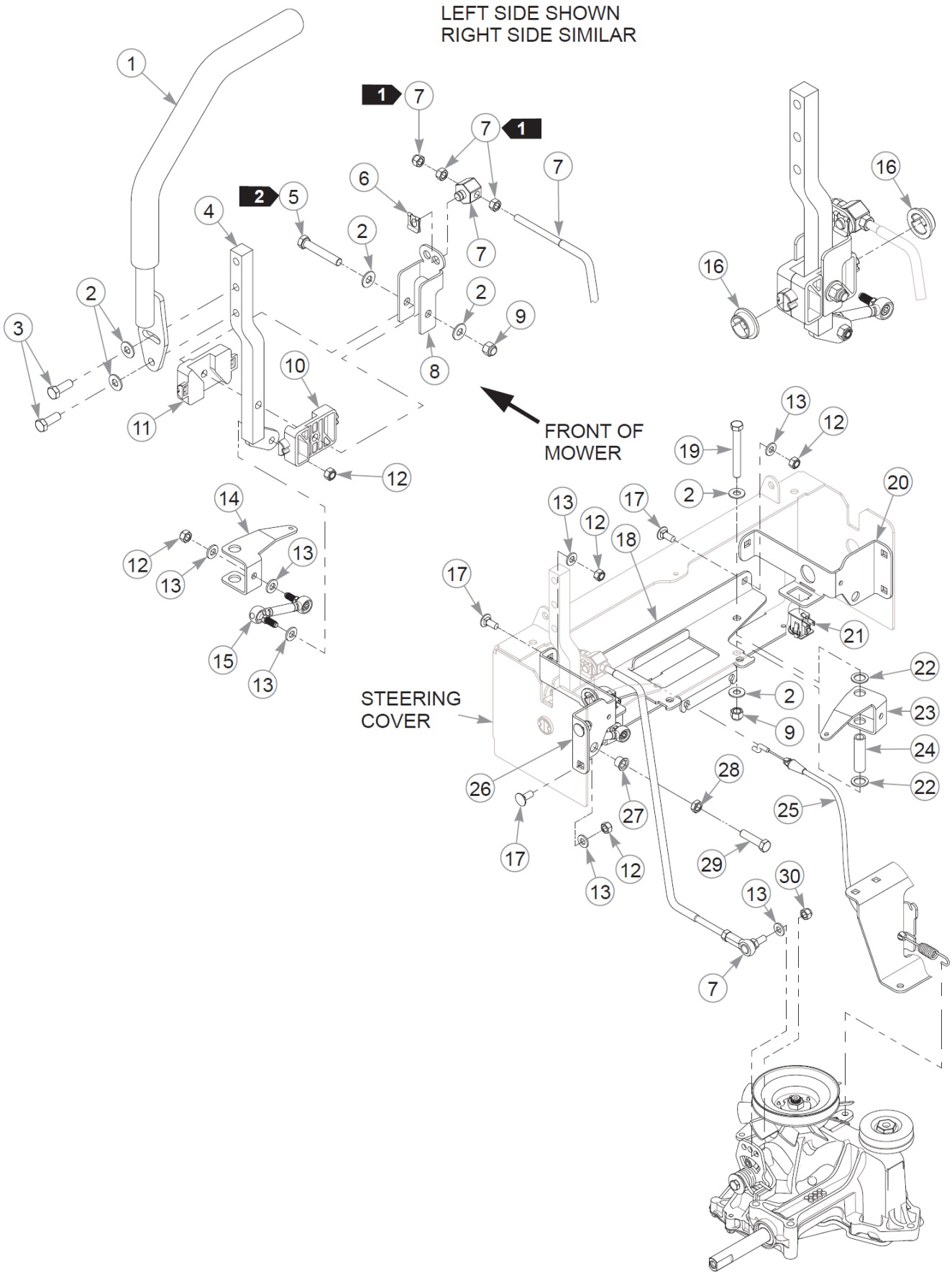
LEFT SIDE SHOWN
RIGHT SIDE SIMILAR
FRONT OF MOWER
STEERING COVER

Steering & Brake

Elemento	Parte n.	Q.ta	Nome
1	607069	2	STEERING BAR W/A
Not Shown	781260	2	GRIP, STEERING BAR
2	767954	12	FW 0.379X.82X.06 HD ZN
3	036244	4	CS .375-16X1.00 HX G5 ZN
4	607073-4	2	STEERING LEVER W/A
5	056036	2	CS .375-16X2.250HXG5
6	606575	2	CLIP, SAFETY
7	607686	2	STEERING ROD S/A
8	124628-3	2	STEERING LINK
9	086660	4	NT .375-16NLG8
10	607077	2	STEERING BLOCK A
11	607076	2	STEERING BLOCK B
12	058776	12	NT .312-18NLG5
13	768523	16	FW 0.343SAE
14	125240-3	1	BRAKE LINK LH
15	604179	2	BRAKE LINK
16	607078	4	STEERING BUSHING
17	016253	8	CB .312-18X .750 FUL ZN
18	126353-1	1	BRAKE CABLE BRACKET
19	016444	2	CS .375-16X3.000HXG5
20	554831	1	SVC, STEERING BRACKET R
21	793315	2	SWITCH, SNAP MOUNT
22	608017	4	FW .580X.875X.06 NYLON
23	125241-3	1	BRAKE LINK RH
24	608016	2	SPACER, BRAKE BRACKET
25	607359	2	BRAKE CABLE
26	554832	1	SVC, STEERING BRACKET L
27	808493	2	RIVET NUT, 3/8-16 THREA
28	706168	2	NT .375-16JAMG5
29	604365	2	CS .375-12X1.50 HX G5 ZN
30	023655	2	NT 0.312-24 NL G8

Comments for Page: Steering & Brake

1. Torque to 19 N•m.
2. Torque to 15 N•m and loosen 45 degrees.
3. The steering brackets include the rivet nuts.

Wheels & Tires

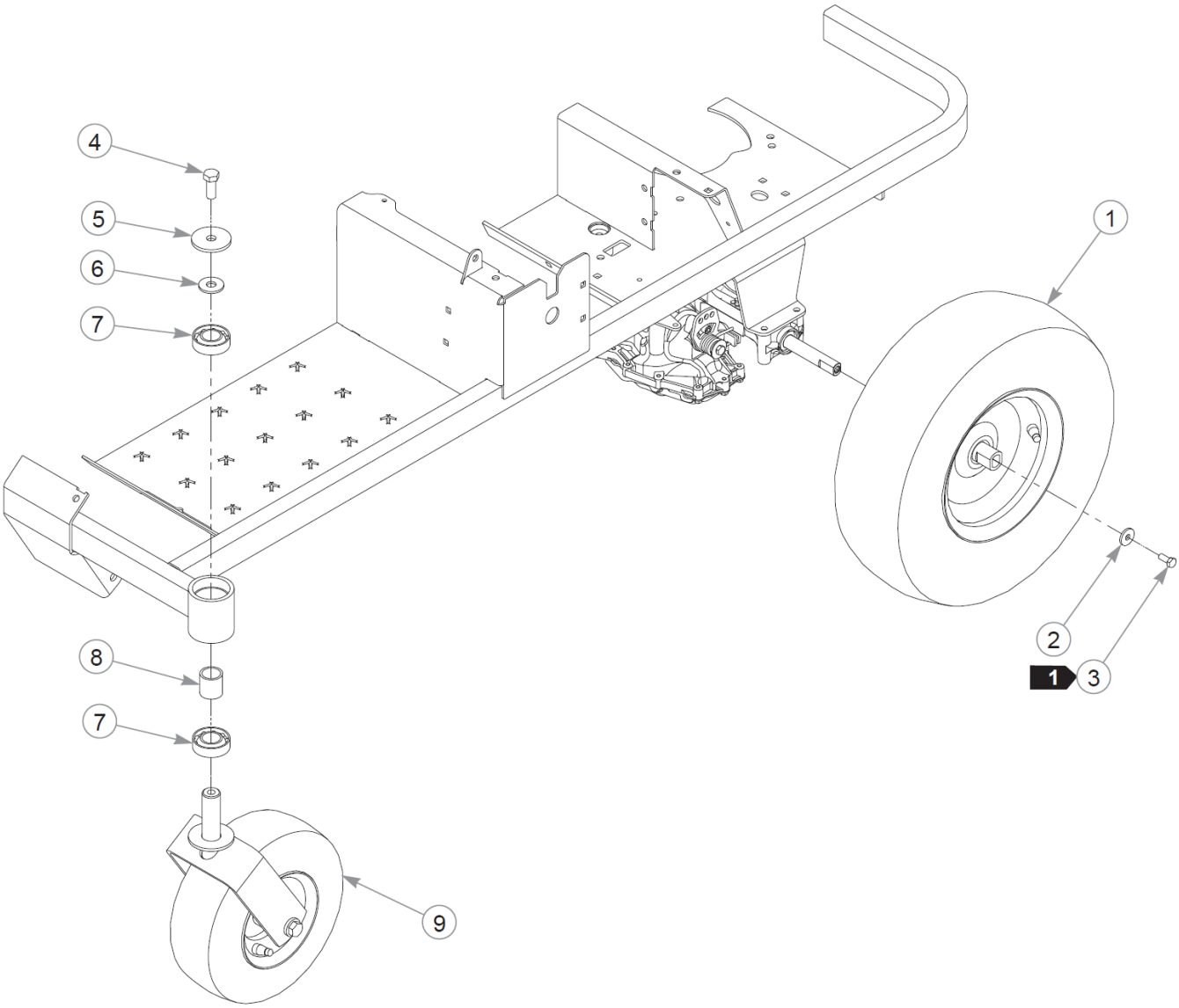

Wheels & Tires

Elemento	Parte n.	Q.ta	Nome
1	607932	2	TIR/WHL 18X6.50-8 BLK
2	712927	2	FW 0.344X1.00X.12 HD ZN
3	606989	2	CS .312-24 X .750 HX G5
4	705954	2	CS .500-13X1.25 HX G5 ZN
5	344267	2	FW .510X2.15X.19 ZN
6	712976	2	FW 0.531X1.38X.12 ZN
7	784223	4	BEARING
8	784603	2	SPACER
9	N/A	2	REFER TO "FRONT WHEEL ASSEMBLY"

Comments for Page: Wheels & Tires

1. Torque to 23 N•m.

Front Wheel Assembly

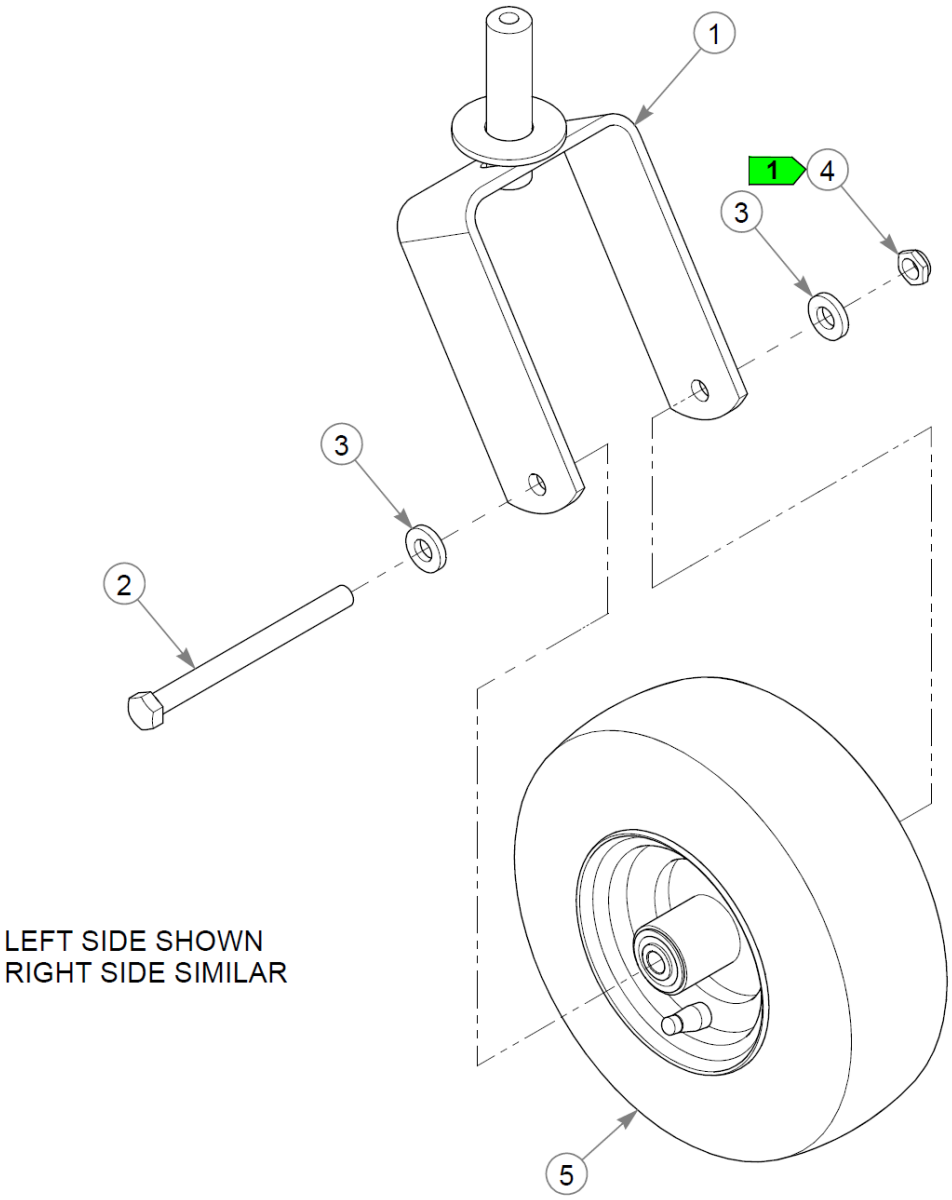

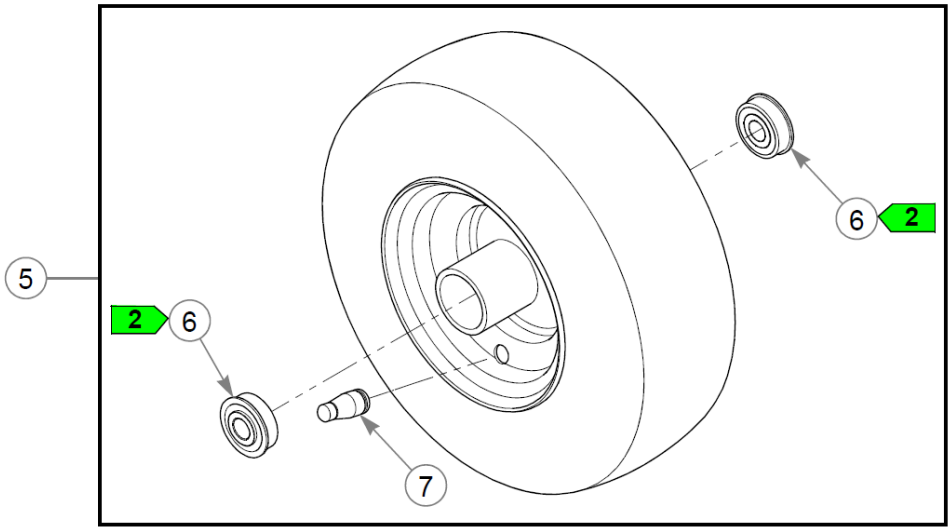

Front Wheel Assembly

Elemento	Parte n.	Q.ta	Nome
1	110116	1	CASTER FORK W/A
2	604718	1	CS .500-13X6.00 HX G5 ZN
3	767962	2	FW .531 x 1.063 x .175
4	707398	1	NT .500-13 JAM NY LK
5	607297	1	TIR/WHL 11X4.00-5 BLK
6	607026	2	BEARING, BALL SEALED
7	019521	1	TIRE VALVE TR-412 GOODY

Comments for Page: Front Wheel Assembly

1. Tighten, then back off the nut until the wheel spins freely.

2. Refer to the General Service Manual for wheel bearing service procedures.

The wheel assembly (607297) includes items 6 & 7.

Drive Wheel Assembly

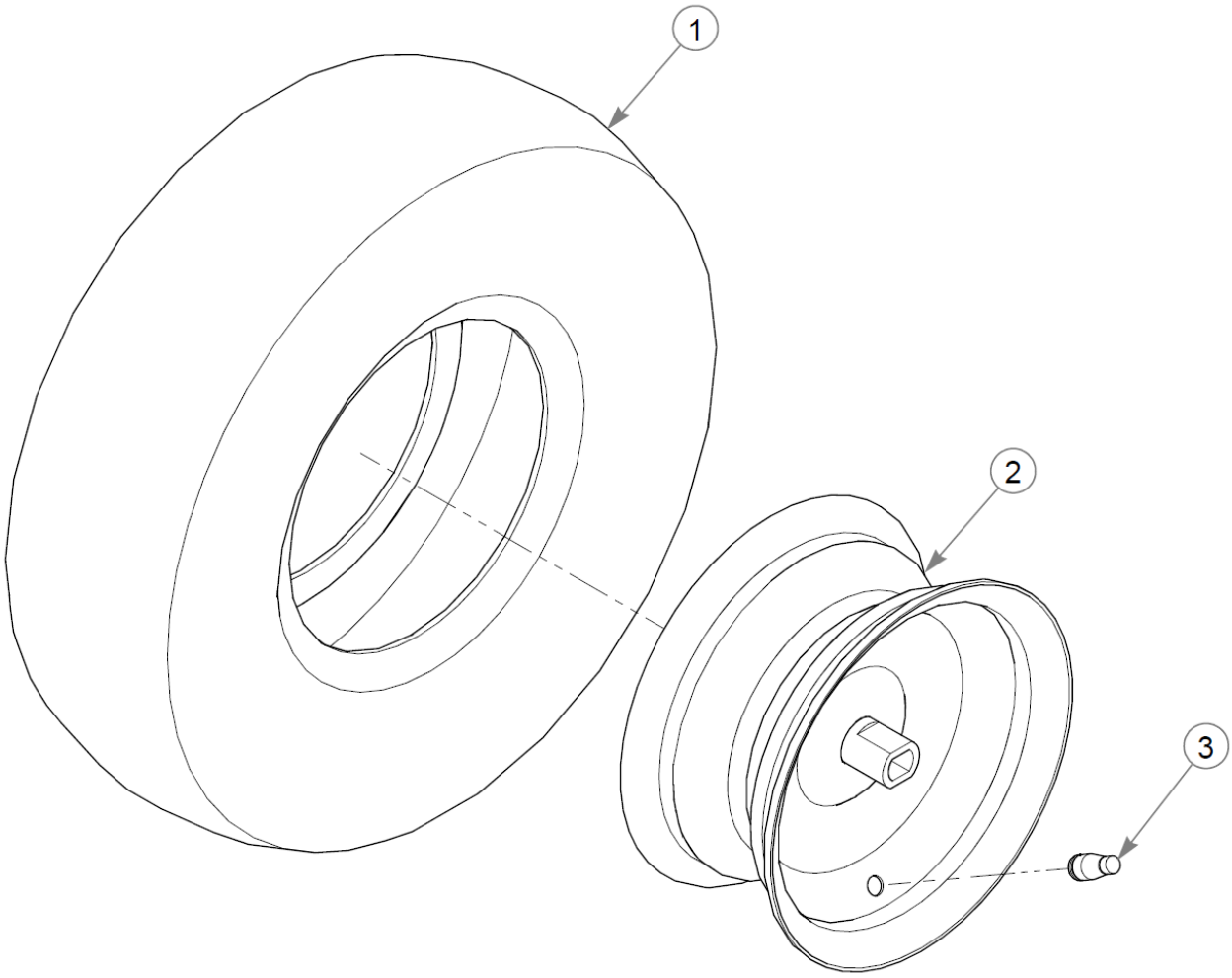

Drive Wheel Assembly

Elemento	Parte n.	Q.ta	Nome
1	607931	1	TIR 18X6.50-8 B4R BGBT
2	607300	1	WHL 8X3.75 0X0.0 BLK
3	019521	1	TIRE VALVE TR-412 GOODY

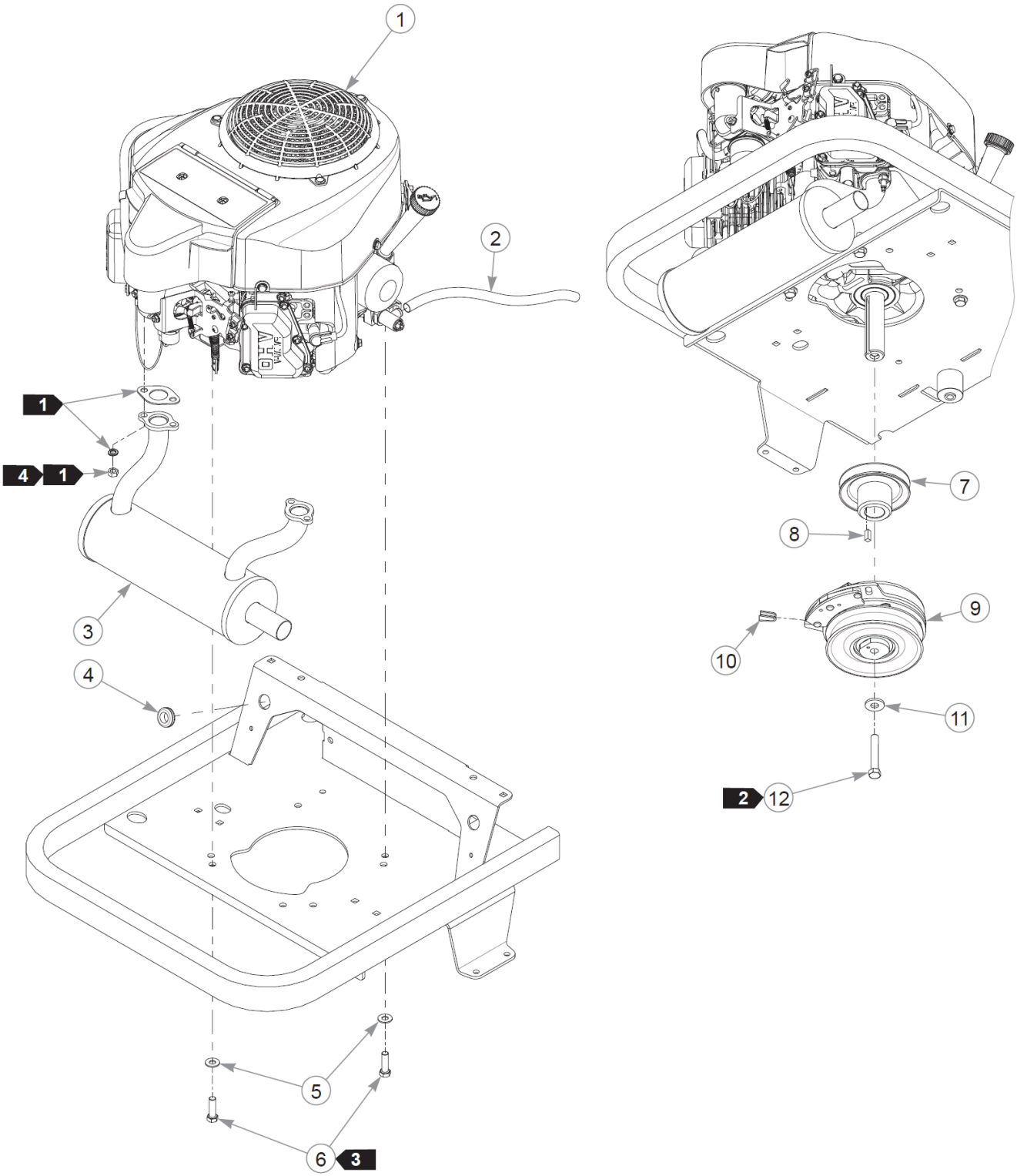
1
2
1
4
1
3
4
5
6
3
7
8
9
10
11
2
12

Pagina lasciata volutamente in bianco

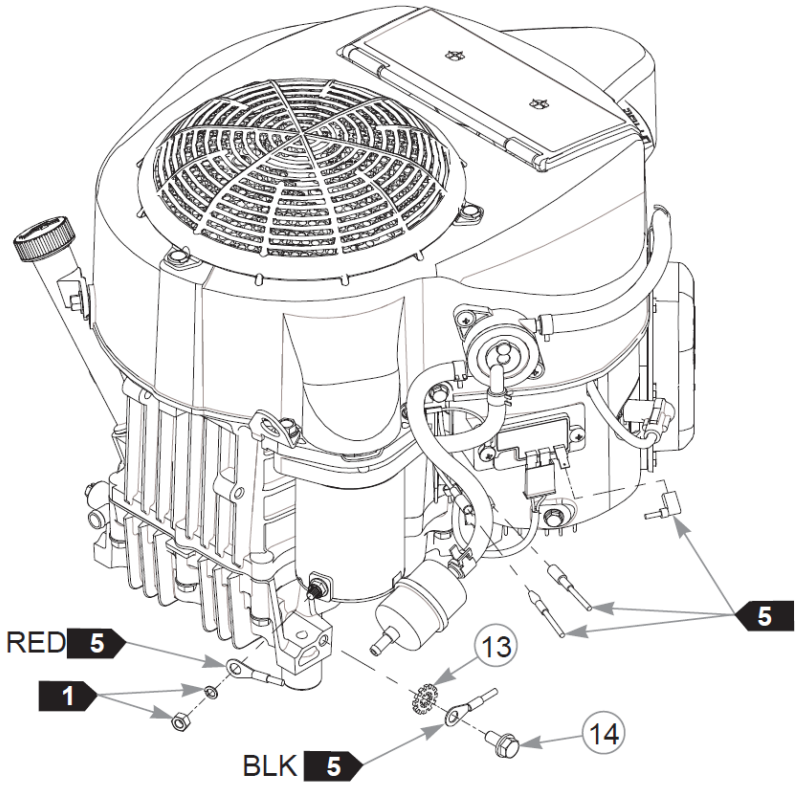
RED 5
1
13
14
BLK 5
5

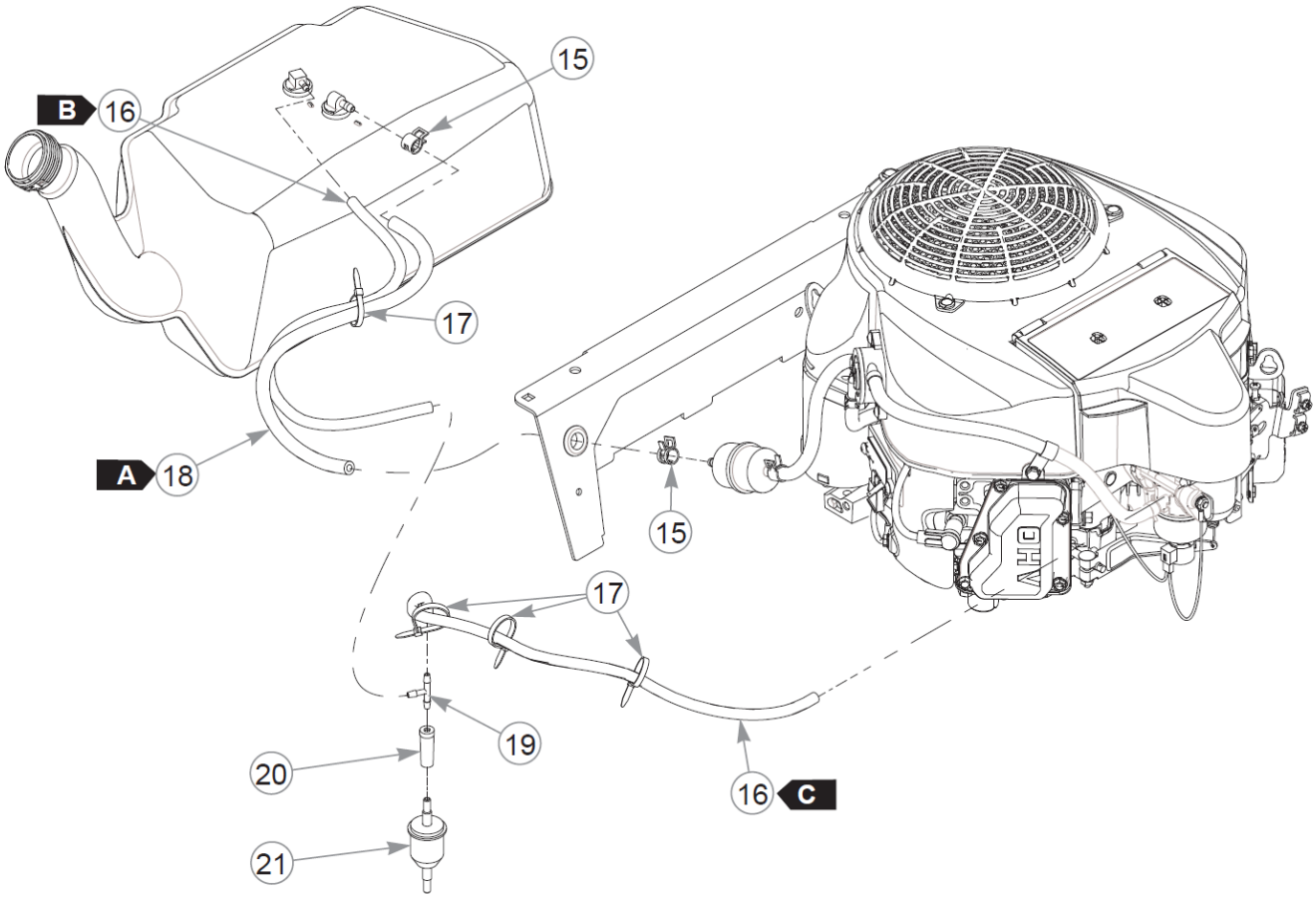
B 16
15
17
A 18
15
17
19
20
21
16 C

Engine, Muffler, Clutch & Fuel System (Multi-Page)

Elemento	Parte n.	Q.ta	Nome
1		1	ENGINE, KAW FR541V
2	604463	30	HOSE, OIL DRAIN
3	607853	1	MUFFLER
4	601400	1	GM .63 x1.13 x.88 x .13
5	767954	4	FW 0.379X.82X.06 HD ZN
6	602580	4	CS .375-16X1.25HXG8ZYP85
7	608015	1	PULLEY - ENGINE
8	712372	1	KEY 1/4 SQ X 0.66 LG(FS)
9	605827K	1	CLUTCH KIT
10	605595	1	BUSHING, CLUTCH
11	602680	1	FW .453X1.12X.12 HRD ZN
12	785659	1	CS .437-20X2.50 HXG5 P85
13	029876	1	LW .312 INTEXT ZN
14	720516	1	CS M8-1.25X16HX FL10.9
15	000323	2	CLIP, HOSE CLAMP
16	603326	114	VAPOR LINE, 3/16"
Commenti per num parte 603326 Sold by the foot.			
17	000331	4	WIRE TIE, SMALL/SHORT
18	015818	46	FUEL LINE, 1/4"
Commenti per num parte 015818 Sold by the foot.			
19	604281	1	TEE, 3/16" PLASTIC
20	604292	1	BOOT, 3/16" TO 1/4" BARB
21	604323	1	VAPOR SYSTEM FILTER

Comments for Page: Engine, Muffler, Clutch & Fuel System (Multi-Page)

1. Supplied with the engine.
2. Torque to 61–65 N•m. Replace (do not reuse) the cap screw if it is removed or loosened. Use only hand tools to install this fastener.
3. Torque to 41–47 N•m. Replace (do not reuse) the cap screw if it is removed or loosened. Use only hand tools to install this fastener.
4. Torque to 23 N•m.
5. Part of the wire harness.

FUEL & VAPOR LINE LENGTHS

A:46 cm TANK TO FUEL FILTER (FUEL)

B: 48 cm TANK TO TEE (VAPOR)

C: 66 cm TEE TO ENGINE (VAPOR)

Engine Service Parts - FR541V

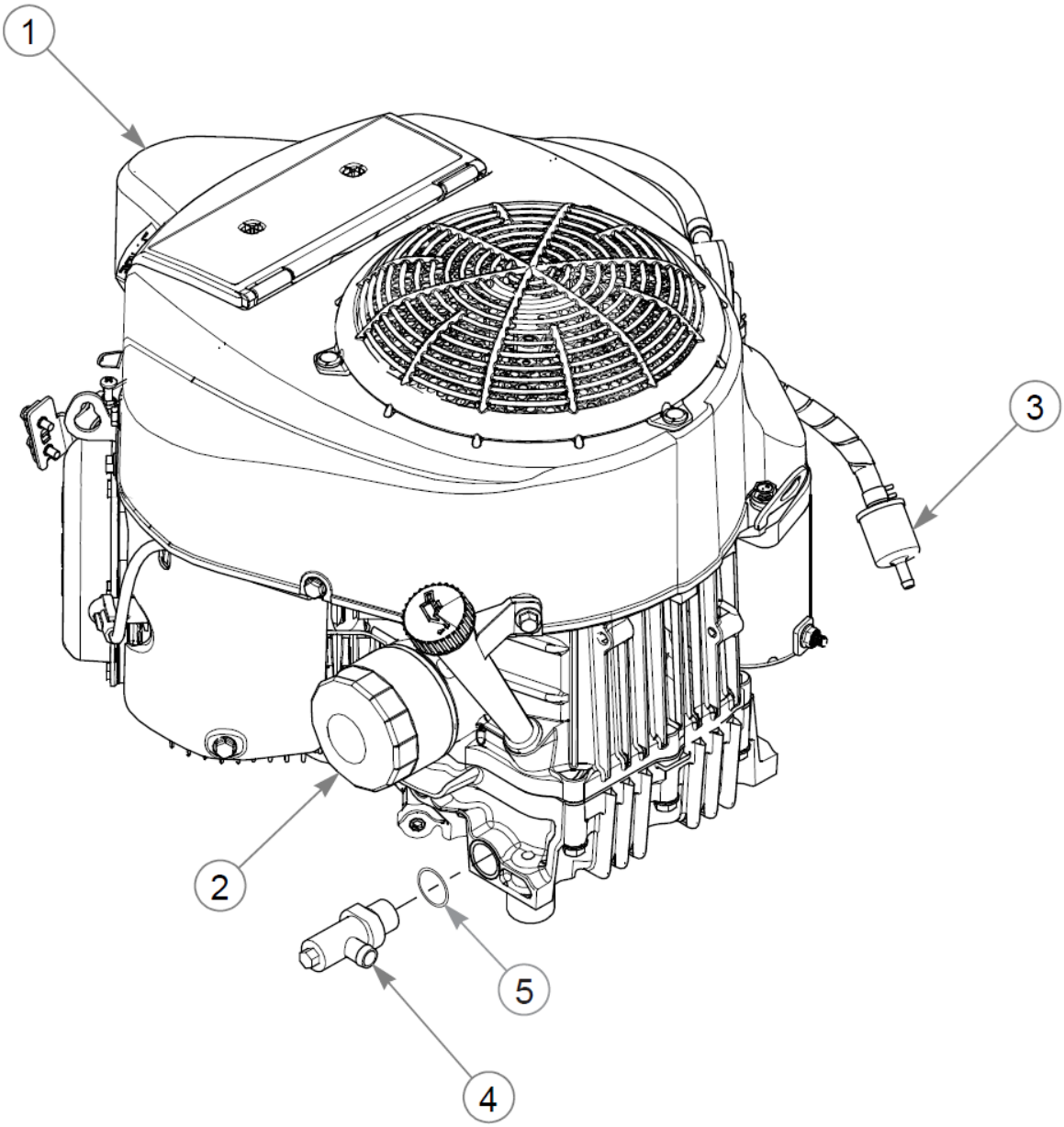

Engine Service Parts - FR541V

Elemento	Parte n.	Q.ta	Nome
1	603059	1	AIR FILTER - MAIN
2	602581	1	ENGINE OIL FILTER
3	068478	1	FUEL FILTER - IN LINE
4	604350	1	VALVE, OIL DRAIN
5	604369	1	O-RING

Fuel System (Multi-Page)

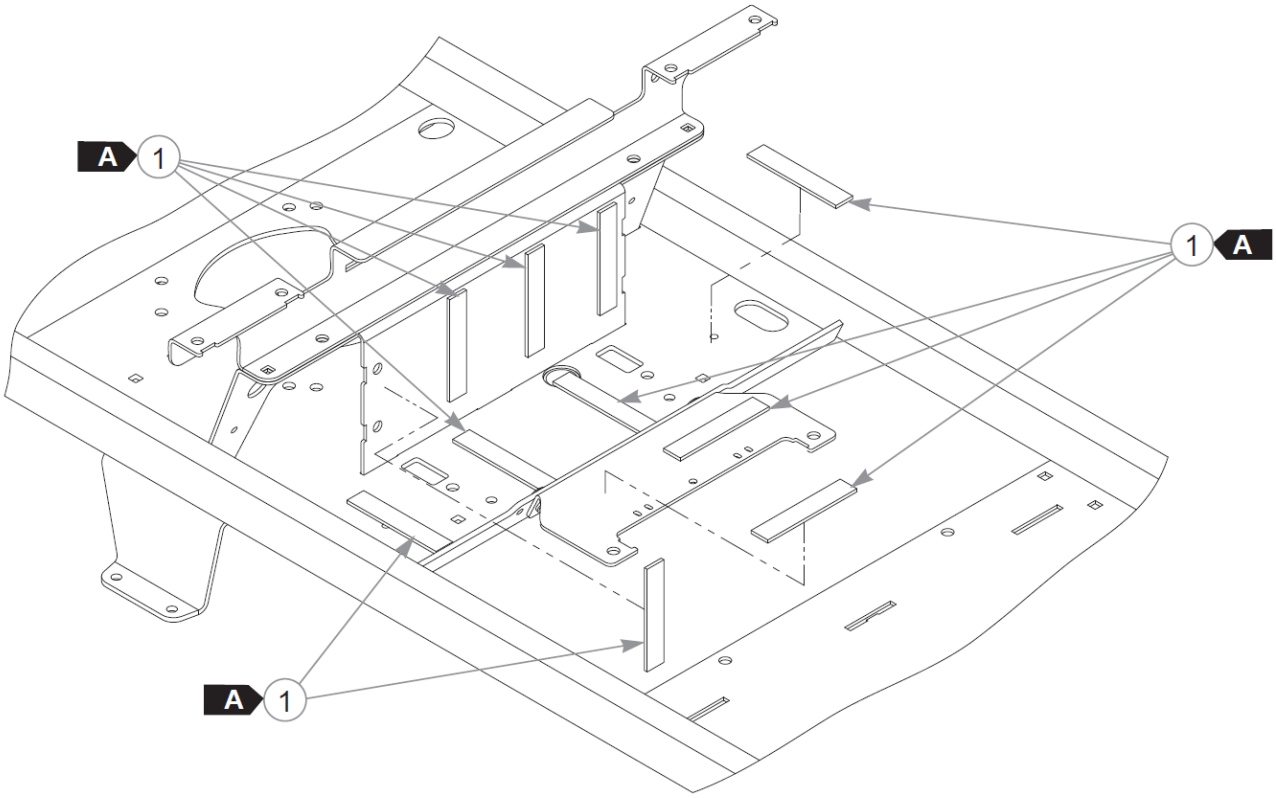

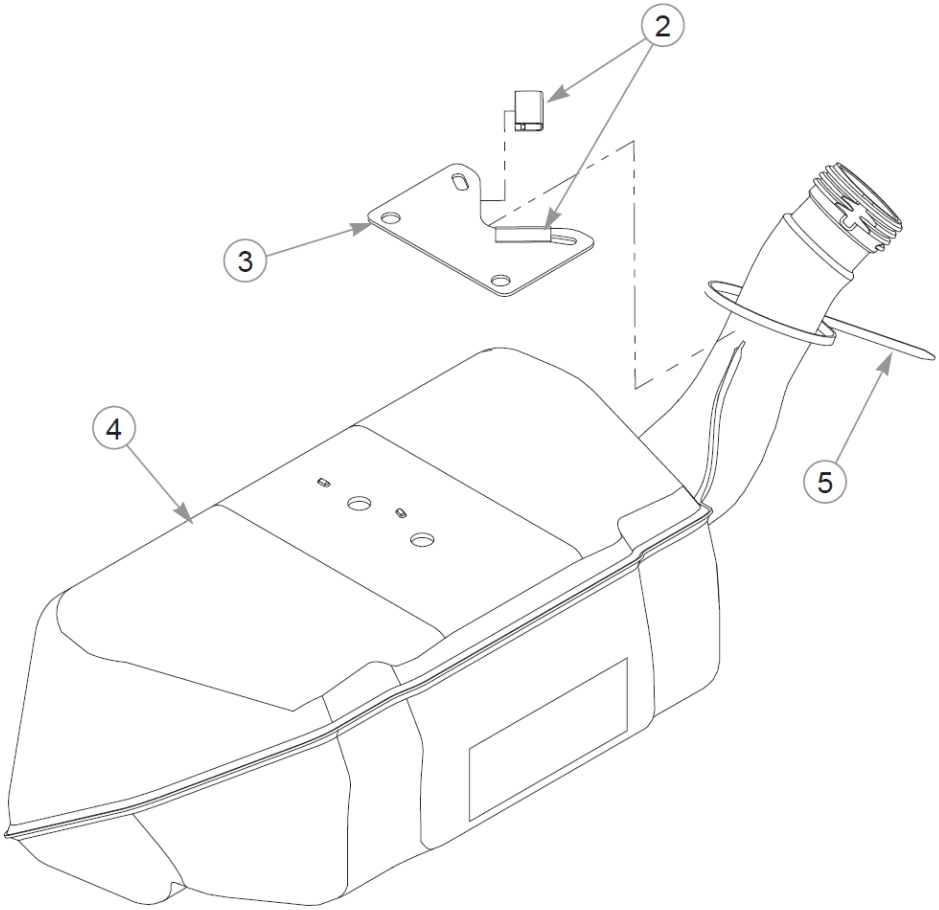

Pagina lasciata volutamente in bianco

Fuel System (Multi-Page)

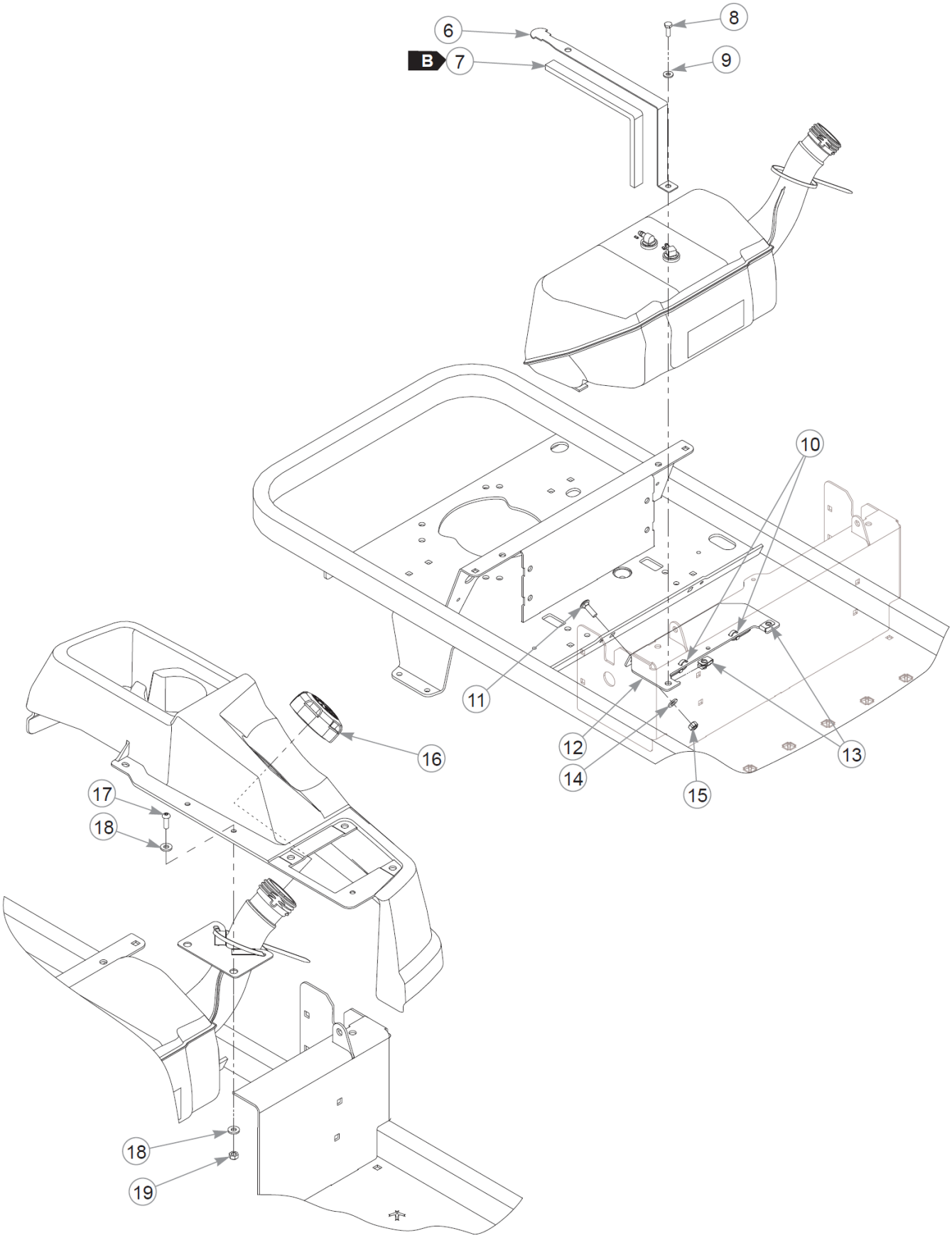

Fuel System (Multi-Page)

Elemento	Parte n.	Q.ta	Nome
1	608040	100	RUBBER STRIP
2	604966	2	TRIM LOCK, 1.13"
3	127226-1	1	SUPPORT - FUEL TANK
4	607925	1	FUEL TANK ASM
5	000430	1	WIRE TIE, SMALL/LONG
6	127225-1	2	STRAP - FUEL TANK
7	713198	68	SEAL 3/8x3/4 SOLD BY FT
8	055939	2	CS .250-20X0.75 HX G5 ZN
9	768515	2	FW 0.281SAE
10	000331	2	WIRE TIE, SMALL/SHORT
11	037887	2	CB .312-18X 1.000 FUL ZN
12	127224-1	1	SUPPORT - FUEL TANK
13	601982	2	CN .250-20X .150 MAX THK
14	768523	2	FW 0.343SAE
15	058776	2	NT .312-18NLG5
16	607731	1	CAP - 2.25" KELCH
17	605473	2	CS .250-20X0.75 BH TX BZ
18	605628	4	FW 0.281X.63X.07 ZB
19	068551	2	NT .250-20 HXZY NL

Comments for Page: Fuel System (Multi-Page)

RUBBER STRIP LENGTH

A: 10 cm

SEAL LENGTH

B: 34 cm

Service Deck

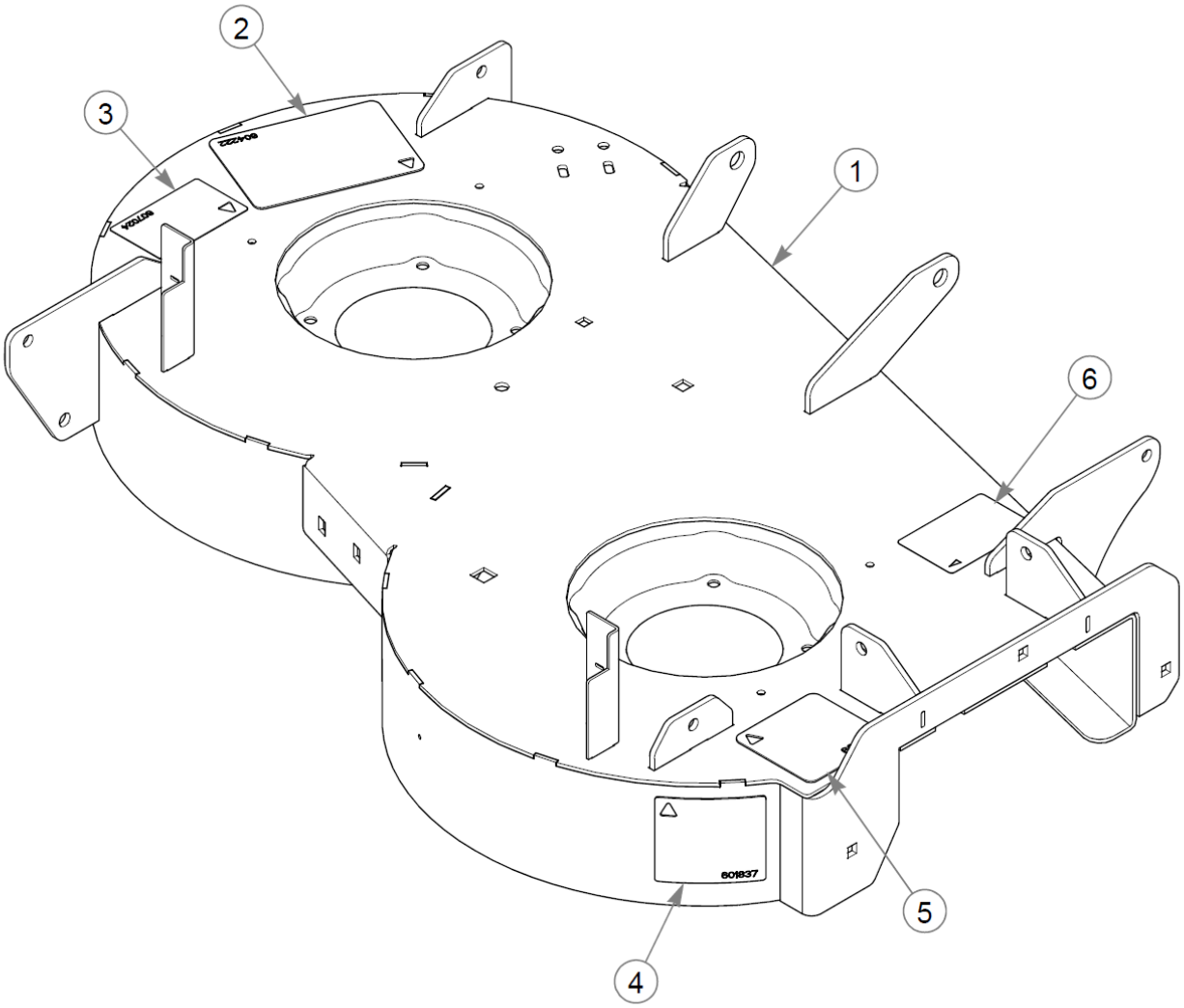

Service Deck

Elemento	Parte n.	Q.ta	Nome
1	554913	1	34" SERVICE DECK
2	604222	1	DECAL, DANGER / OBJECTS
3	607024	1	DECAL, 34" DECK I.D.
4	601837	1	DECAL, DECK DANGERS
5	607316	1	DECAL, DANGER CHUTE
6	602243	1	DECAL, BELT ROUTING

Comments for Page: Service Deck

1. The frame includes the decals.

Deck Pulleys & Spindles

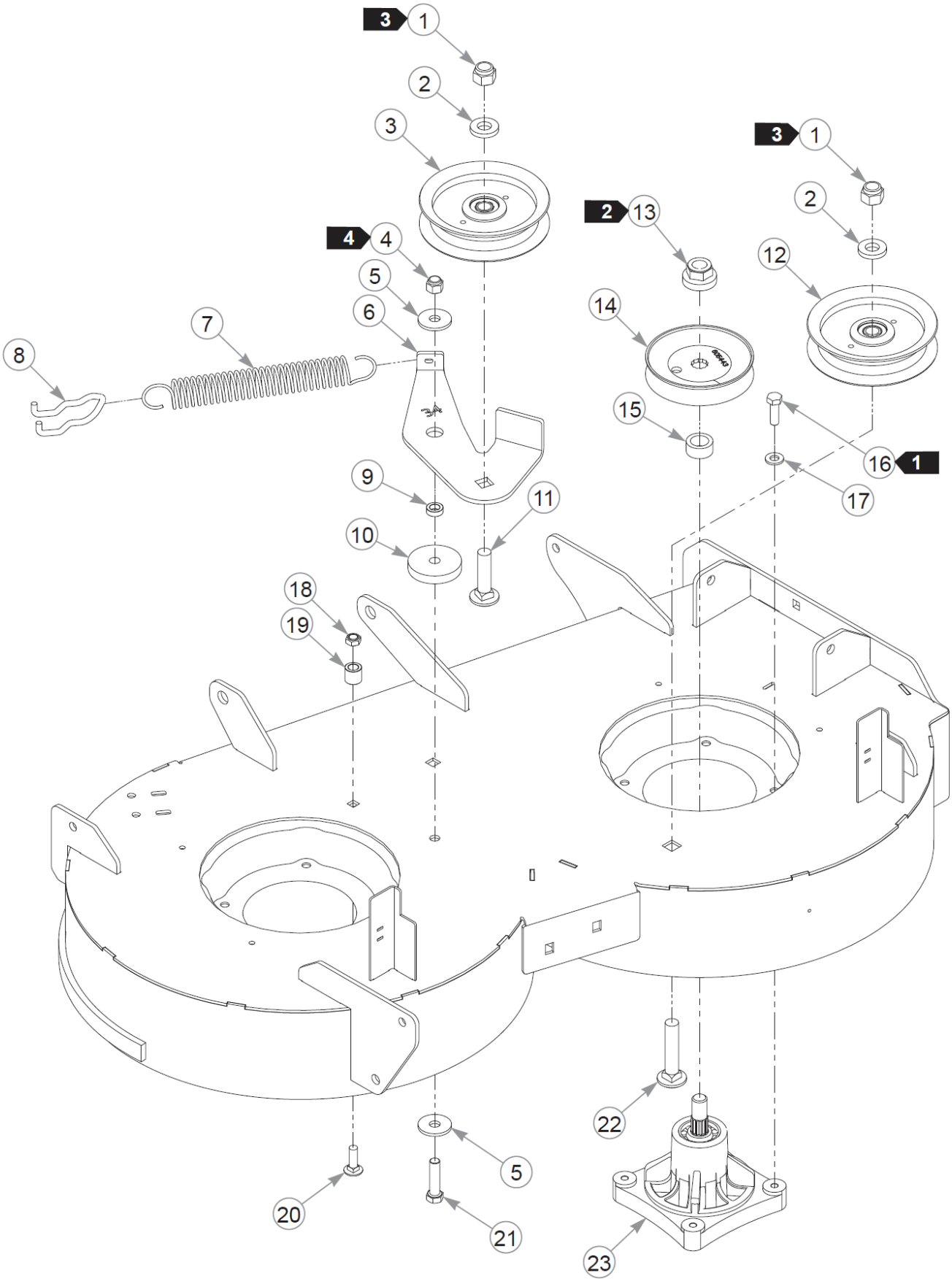

Deck Pulleys & Spindles

Elemento	Parte n.	Q.ta	Nome
1	781567	2	NT .500-13NLG5
2	767962	2	FW .531 x 1.063 x .175
3	605512	1	4" IDLER PULLEY
4	086660	1	NT .375-16NLG8
5	712893	2	FW 0.406X1.25X.12 HD ZN
6	124955-4	1	IDLER ARM, PIVOTING 34"
7	605379	1	SPRING, EXTENSION
8	604110	1	ANCHOR, SPRING TENSIONER
9	601839	1	PIVOT SPACER BUSHING
10	117539	1	SPACER, IDLER ARM
11	604253	1	CB .50-13 X 2.00 STD ZN
12	126123	1	SVC KIT 604219 PULLEY
13	606943	2	NT .562-18 HX NLG5
14	605443	2	DRIVE PULLEY-36"
15	604123	2	SPACER, PULLEY
16	036236	8	CS .312-18X1.000HXG5
17	768523	8	FW 0.343SAE
18	604251	1	NT .312-18 HXNL JAM G2ZN
19	122398	1	TENSIONING PULLEY STOP
20	037887	1	CB .312-18X 1.000 FUL ZN
21	080655	1	CS .375-16X1.500HXG5
22	604254	1	CB .50-13 X 2.50 STD ZN
23	604214	2	SPINDLE ASSY, RAP/ALP

Comments for Page: Deck Pulleys & Spindles

1. Torque to 23 N•m.
2. Torque to 102 N•m.
3. Torque to 99 N•m.
4. Torque to 41 N•m. The idler arm must pivot freely.

Mulch Kit—34" Deck
Part Number 125033
Mulch Kit—42" Deck
Part Number 125031

Instruction Number 125032

Packing List

Listed below are parts included in this kit. If any parts are missing or damaged, please contact Excel Parts Department. Retain these instructions for replacement parts.

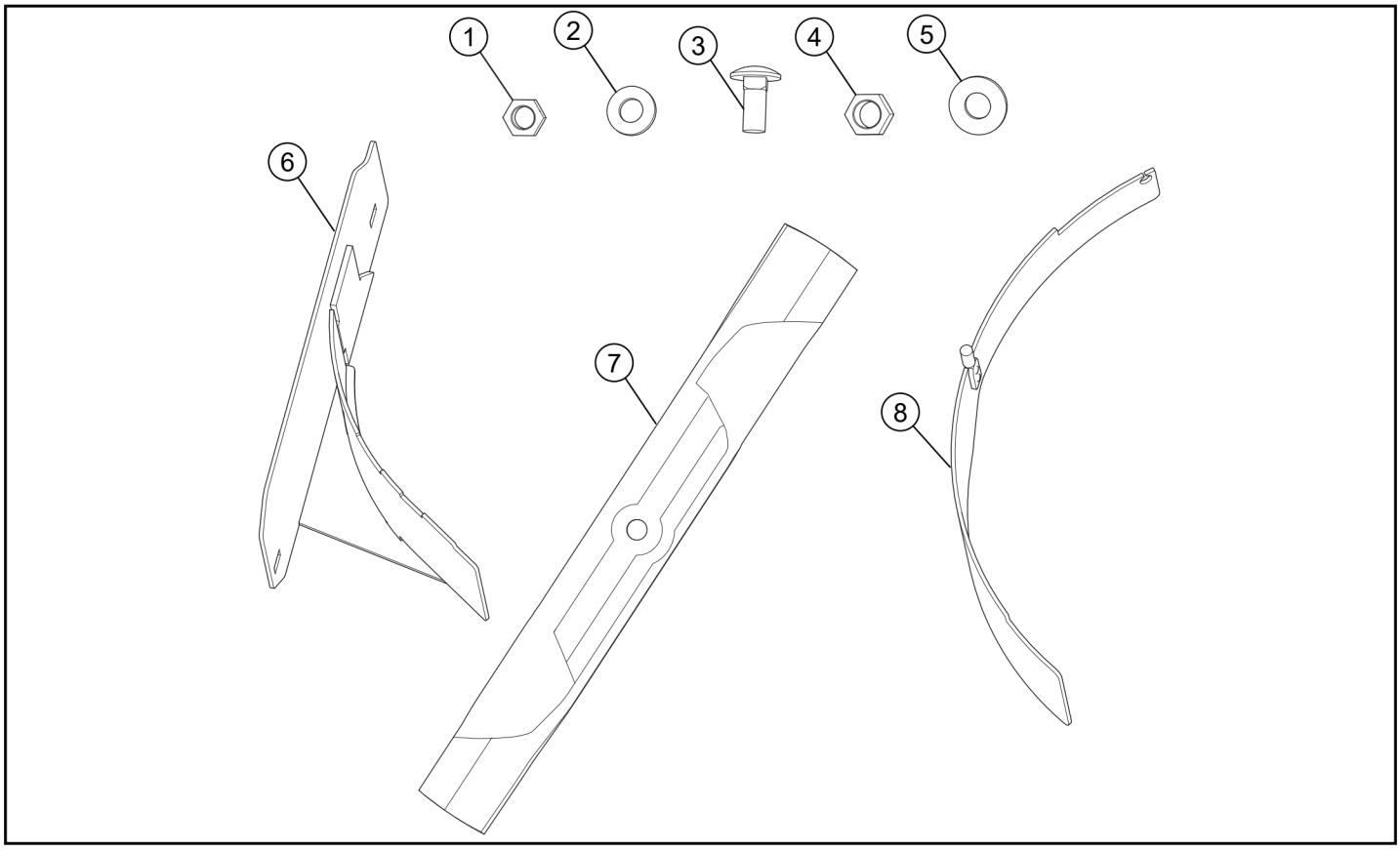

INDEX NO.	PART NO.	DESCRIPTION	QTY.
1	058776	NT .312-18 NL G5	2
2	768523	FW 0.343 SAE	2
3	016253	CB .312-18 X .750 FUL ZN	2
4	086660	NT .375-16 NL G8	1
5	767954	FW 0.379 X 0.813 X 0.063	1
6	125079-3	MULCH CLOSE OFF	1
7	607311	BLADE,16.75 -MULCH-F-CW 34"	2
	607310	BLADE, 20.50" MULCH-F-CW 42"	2
8	125083-3	MULCH WRAPPER, 34"	1
	109312	MULCH WRAPPER, 42"	1

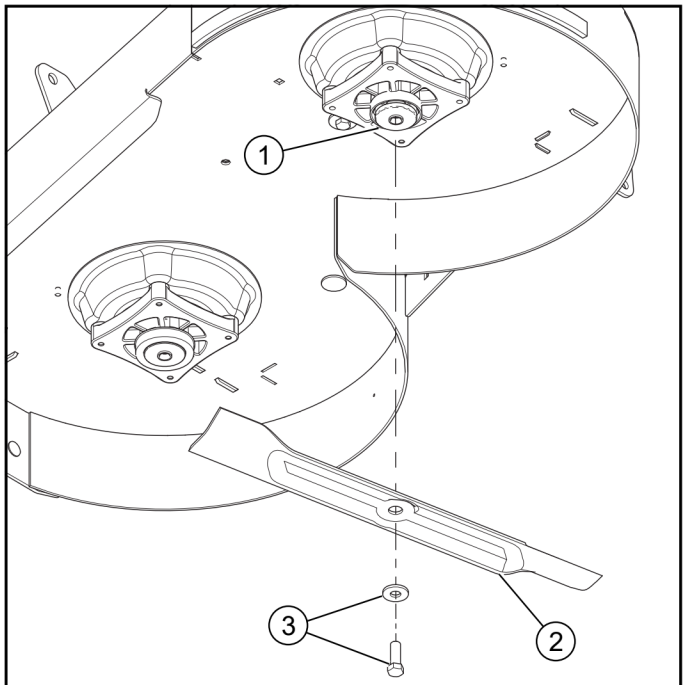

INDEX NO.	DESCRIPTION
1	SPINDLE SHAFT
2	EXISTING BLADE
3	EXISTING HARDWARE

FIG. 1

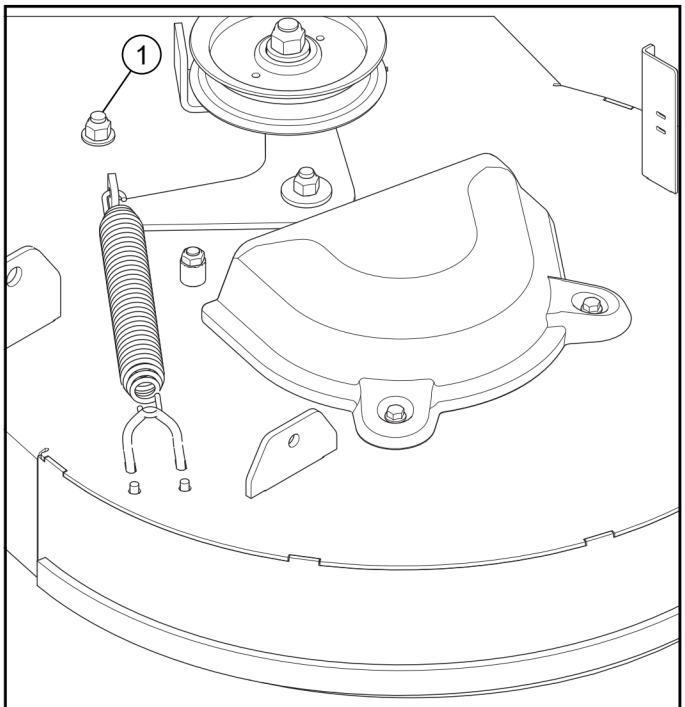

INDEX NO.	DESCRIPTION
1	EXISTING HARDWARE

FIG. 2

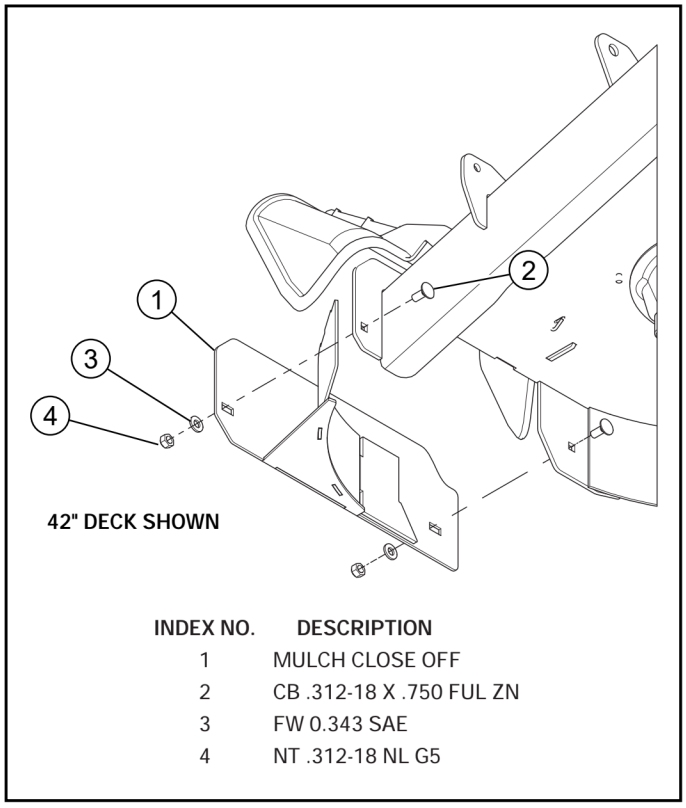

INDEX NO.	DESCRIPTION
1	MULCH CLOSE OFF
2	CB .312-18 X .750 FUL ZN
3	FW 0.343 SAE
4	NT .312-18 NL G5

FIG. 3

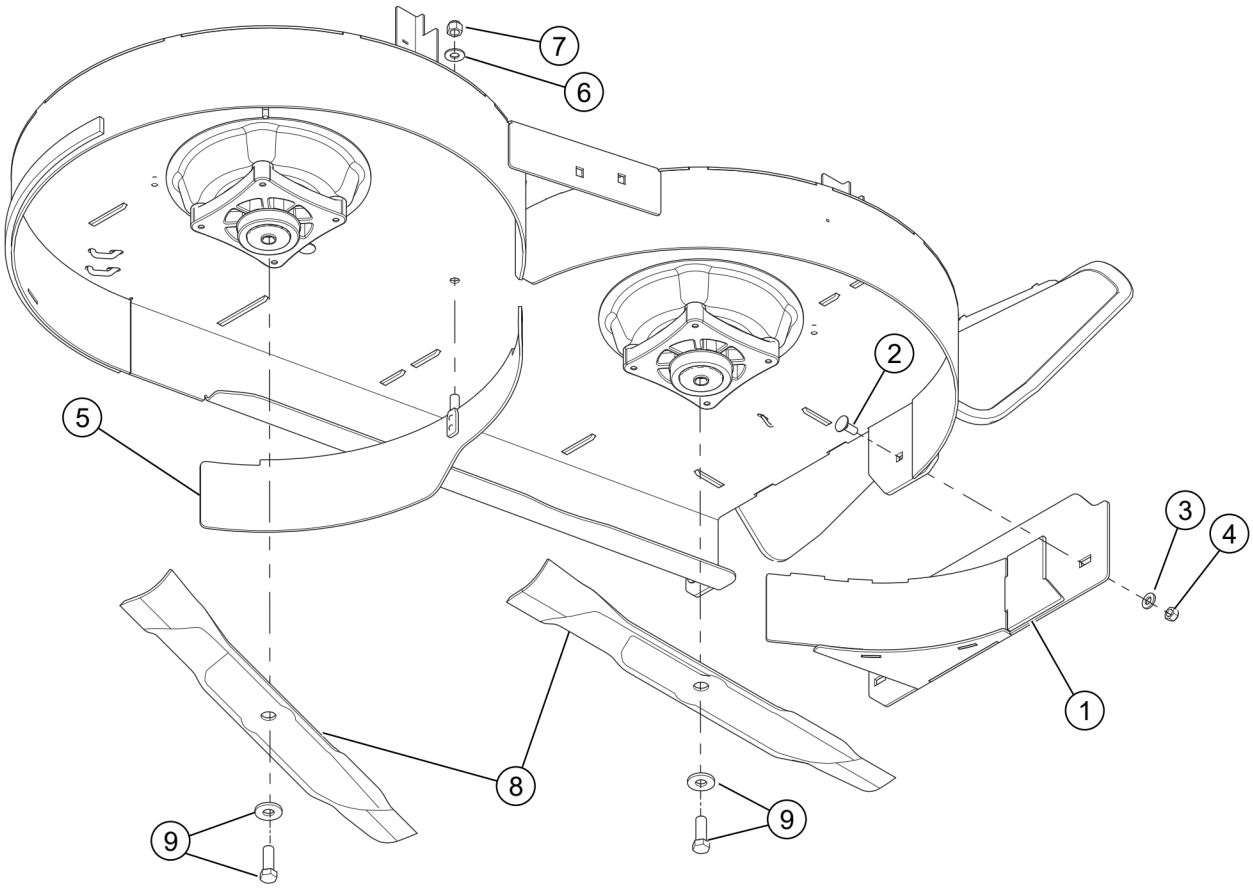

INDEX NO.	DESCRIPTION
1	MULCH CLOSE OFF
2	CB .312-18X .750 FUL ZN
3	FW 0.343 SAE
4	NT .312-18 NL G5
5	MULCH WRAPPER
6	FW 0.379 X 0.813 X 0.063
7	NT .375-16 NL G8
8	MULCHING BLADE
9	EXISTING BLADE HARDWARE

FIG. 4

Spindle Service Parts - 604214

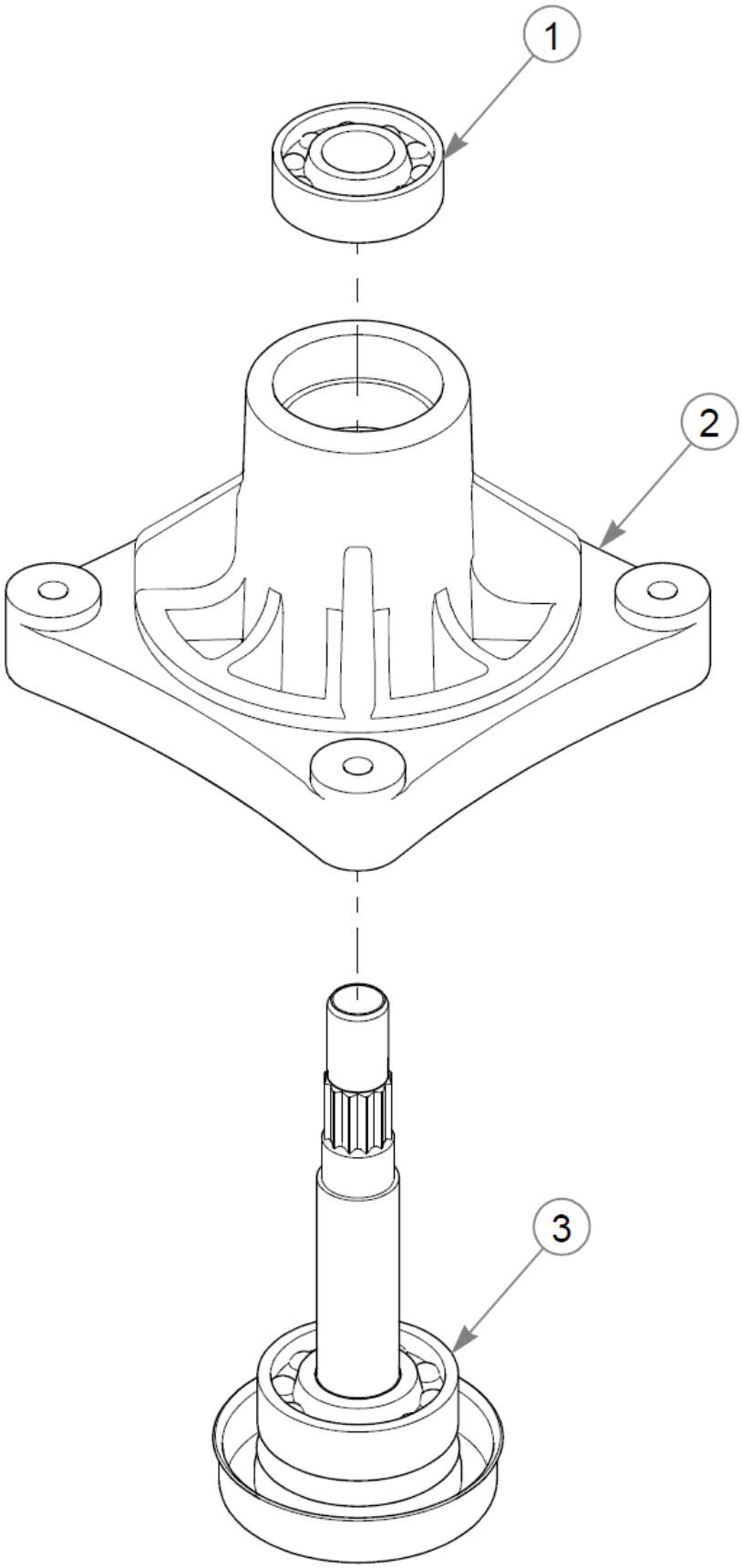

Spindle Service Parts - 604214

Elemento	Parte n.	Q.ta	Nome
1	604019	1	BEARING, SPINDLE
2	604218	1	CAST HOUSING
3	607274	1	SVC SHAFT

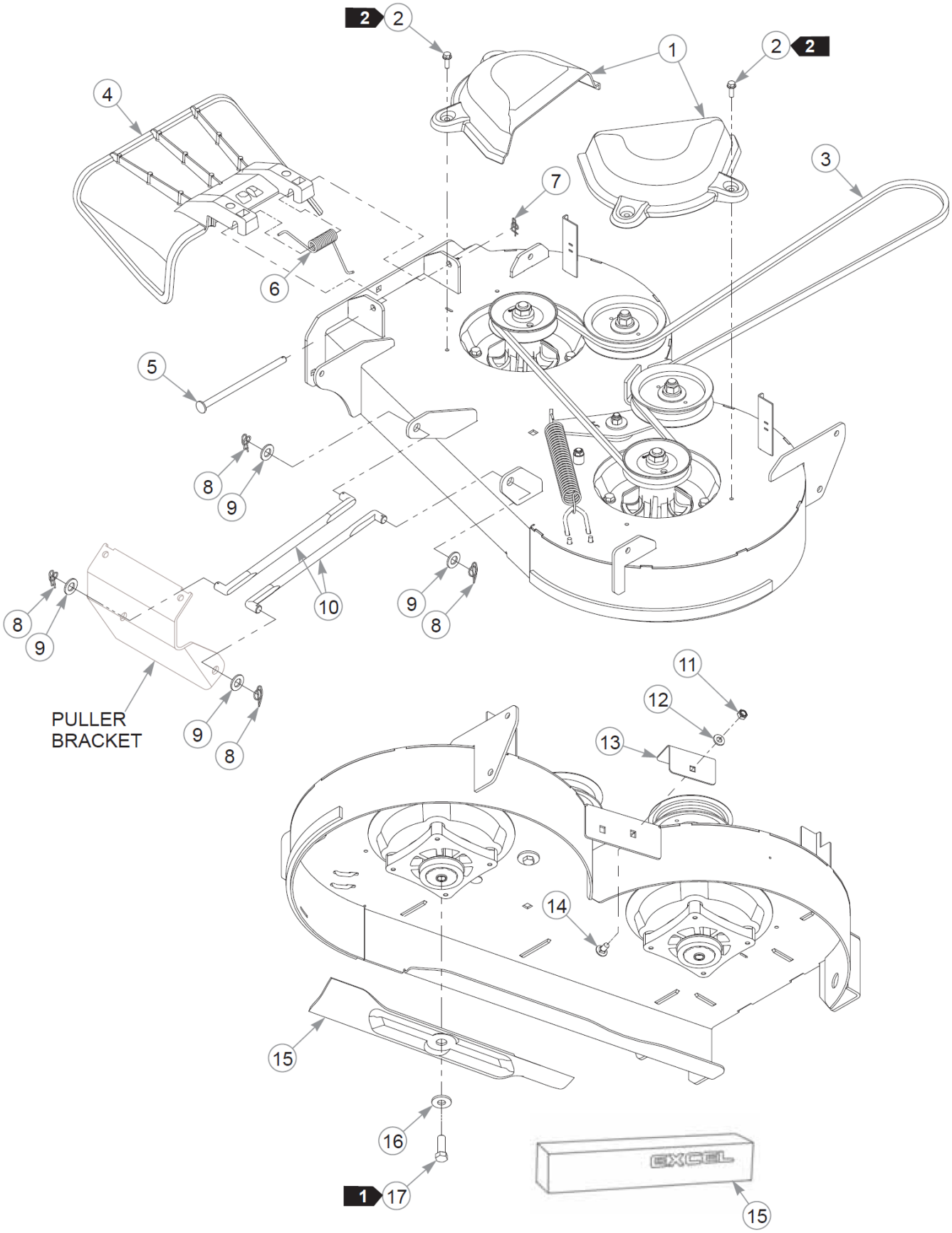
2
2
1
2
2
4
3
7
6
5
8
9
10
9
8
8
9
PULLER
BRACKET
9
8
11
12
13
14
15
16
1
17
EXCEL
15

Deck Belt, Discharge Chute, Pulley Covers & Blades

Elemento	Parte n.	Q.ta	Nome
1	604403	2	PULLEY COVER
2	604324	4	CS .250-20 X .75 HX FLG
3	607058	1	DECK BELT
4	607145	1	DISCHARGE CHUTE
5	607157	1	PIN, DISCHARGE CHUTE
6	607146	1	CHUTE SPRING
7	607093	1	CP, RUE RING .054 X .392
8	607051	4	CP, RUE RING .062 X .520
9	004168	4	FW .531x1.00x.090 ZN
10	607016	2	PULLER, DECK
11	604251	1	NT .312-18 HXNL JAM G2ZN
12	768523	1	FW 0.343SAE
13	607262-4	1	PLATE, WEAR
14	083147	1	CB .312-18X .620 G5 ZN
15	607281	2	BLADE,16.75"-M-F-CW
Not Shown	607281X	1	10PK BLADE, 16.75"-M-F-C
Not Shown	607311	2	BLADE, 16.75" MULCH-F-CW
Not Shown	607311X	1	10PK BLADE, 16.75" MULCH
16	602680	2	FW .453X1.12X.12 HRD ZN
17	754101	2	CS .437-20X1.250HXG5

Comments for Page: Deck Belt, Discharge Chute, Pulley Covers & Blades

1. Torque to 65 N•m.

2. Torque to 2.7–6.7 N•m on these 2 self-tapping screws.

Deck Lift & Mounting Hardware (Multi-Page)

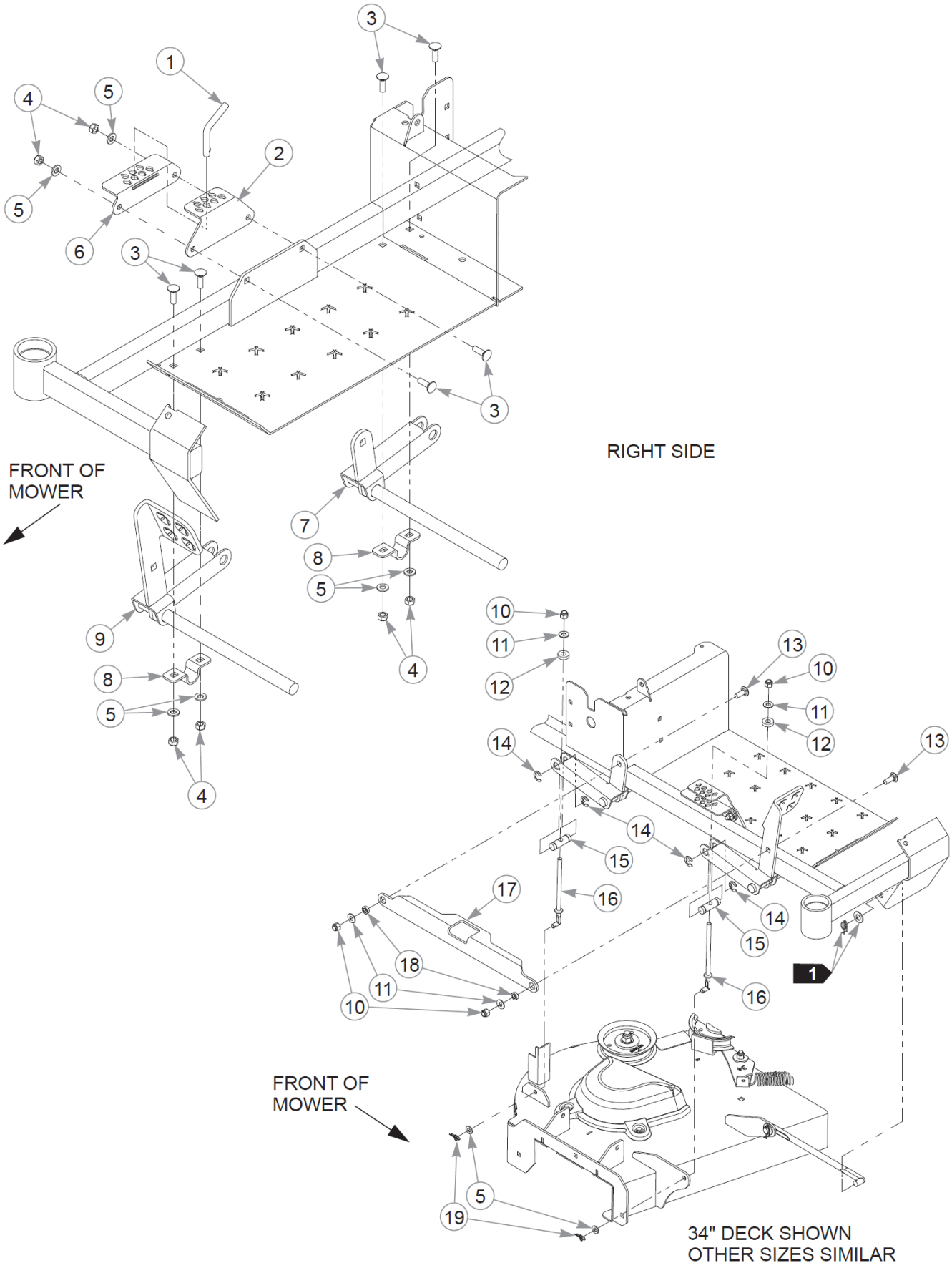

Pagina lasciata volutamente in bianco

Deck Lift & Mounting Hardware (Multi-Page)

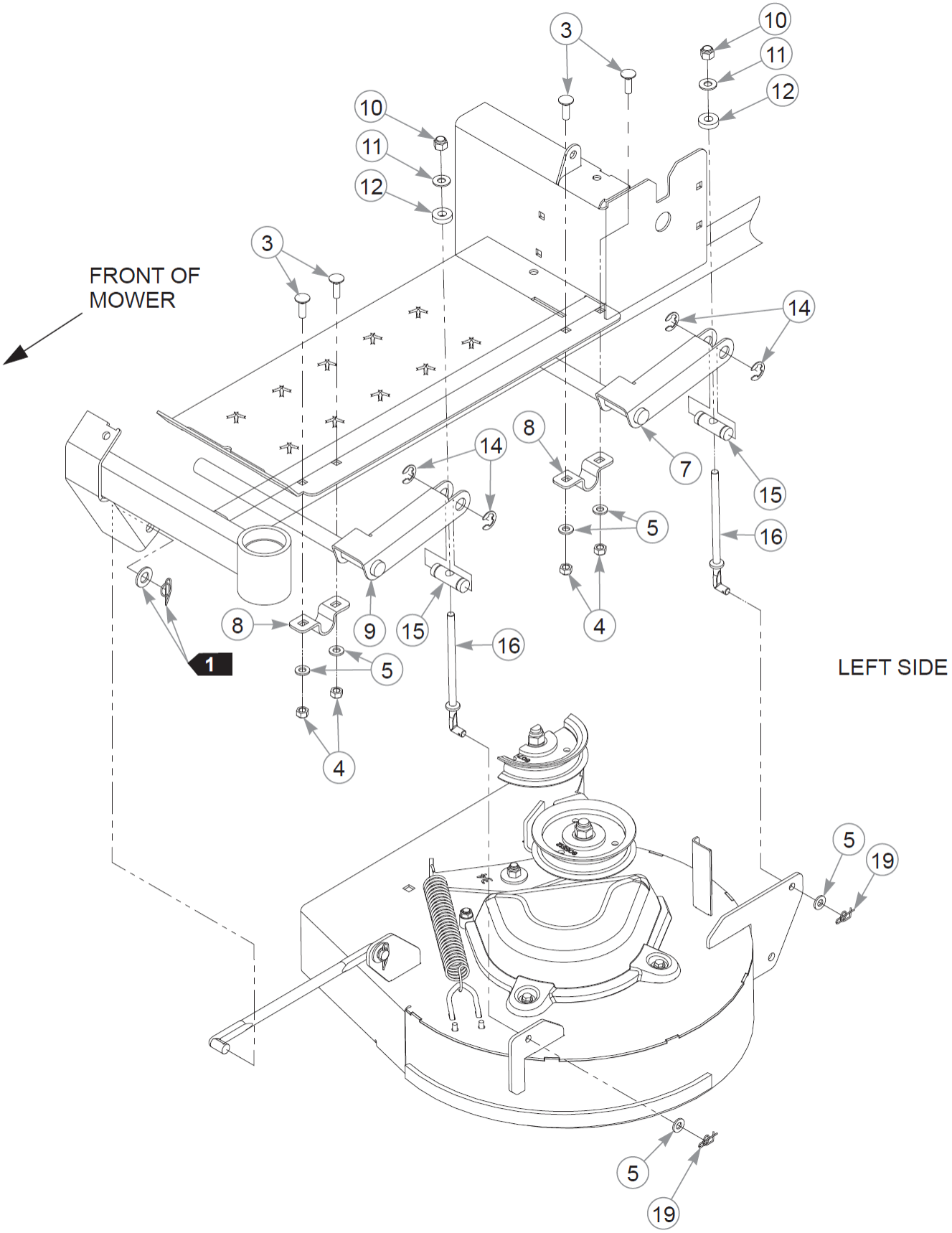

Deck Lift & Mounting Hardware (Multi-Page)

Elemento	Parte n.	Q.ta	Nome
1	601963	1	PIN, DECK HEIGHT STOP
2	125228-1	1	DECK LIFT BRACKET
3	037887	10	CB .312-18X 1.000 FUL ZN
4	058776	10	NT .312-18NLG5
5	768523	14	FW 0.343SAE
6	125229-1	1	DECK LIFT BRACKET
7	126103-1	1	DECK LIFT W/A, REAR
8	124635-3	4	DECK LIFT STRAP
9	126102-1	1	DECK LIFT W/A, FRONT
10	086660	6	NT .375-16NLG8
11	767954	6	FW 0.379X.82X.06 HD ZN
12	605114	4	FW .41X.94X.25 UHMW
13	025395	2	CB .375-16X 1.00 G5 ZN
14	791673	8	CLIP E,.625x.480x.042 Z
15	118018	4	PIVOT, DECK LIFT
16	608334	4	DECK HANGER
17	125233-4	1	DECK LIFT LINK
18	601839	2	PIVOT SPACER BUSHING
19	607093	4	CP, RUE RING .054 X .392

Comments for Page: Deck Lift & Mounting Hardware (Multi-Page)

1. Part of the Deck Assembly.

Seat

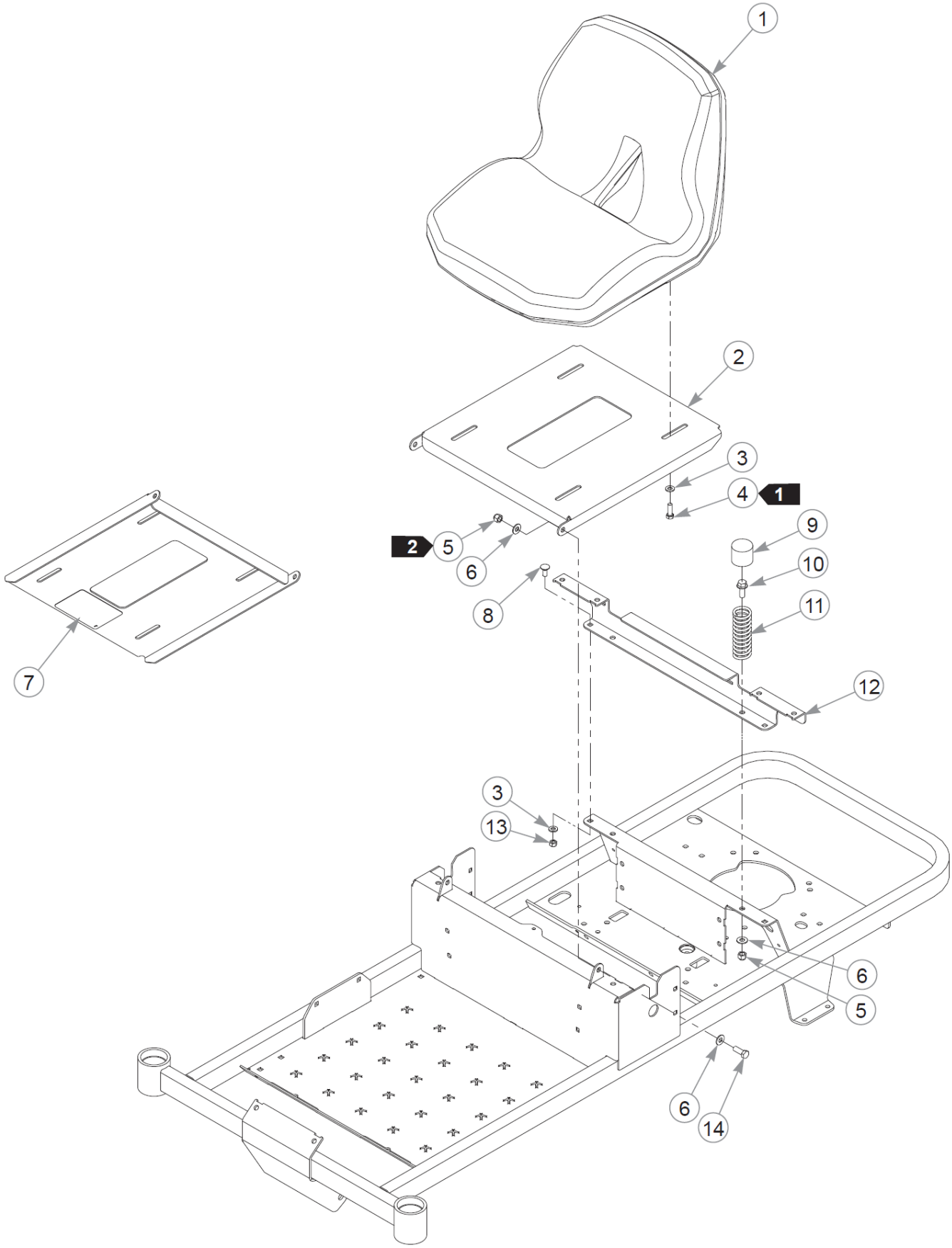

Seat

Elemento	Parte n.	Q.ta	Nome
1	608053	1	SEAT, SK120
2	554825	1	SVC, SEAT PAN
3	768523	6	FW 0.343SAE
4	036236	4	CS .312-18X1.000HXG5
5	086660	4	NT .375-16NLG8
6	767954	6	FW 0.379X.82X.06 HD ZN
7	601815	1	DECAL, BATTERY WARNINGS
8	016253	2	CB .312-18X .750 FUL ZN
9	607838	2	CAP
10	029751	2	CS .375-16X1.00 HXF G5ZN
11	793851	2	SPRING,COMP 1.25X4.00X.
12	124617-1	1	SEAT SUPPORT
13	058776	2	NT .312-18NLG5
14	036244	2	CS .375-16X1.00 HX G5 ZN

Comments for Page: Seat

1. Torque to 9.5 N•m.
2. Do not torque; the seat pan and seat stop must pivot freely.
3. The seat pan includes the decal.